1. ALL RESISTANCE VALUES ARE IN OHMS, 0.1 WATT +/- 5%.
2. ALL CAPACITANCE VALUES ARE IN MICROFARADS.
3. ALL CRYSTALS & OSCILLATOR VALUES ARE IN HERTZ.

REV	ECN	DESCRIPTION OF REVISION	CK APPD / DATE
10	0008927012	ENGINEERING RELEASED	2017-06-06

D21 MLB - DVT (0K2FAB)

LAST_MODIFICATION=Tue Jun 6 18:57:04 2017

PAGE	CSA	CONTENTS	SYNC	DATE
1	1	TABLE OF CONTENTS	sync	06/19/2016
2	2	SYSTEM: BOM TABLES (1/2)	sync	02/24/2017
3	3	SYSTEM: BOM TABLES (2/2)	test_mlb	03/17/2017
4	4	SYSTEM:MECH COMPONENTS	sync	04/14/2017
5	5	SYSTEM: Testpoints	sync	04/14/2017
6	6	BOOTSTRAPPING	sync	09/19/2016
7	10	SOC: JTAG,USB,XTAL	sync	04/14/2017
8	11	SOC: PCIE	sync	04/14/2017
9	12	SOC: MIPI + ISP	sync	04/14/2017
10	13	SOC: LPDP	sync	04/14/2017
11	14	SOC: SERIAL + SMC	sync	04/14/2017
12	15	SOC: GPIO + UART	sync	04/14/2017
13	16	SOC: AOP	sync	04/14/2017
14	17	SOC: Power (1/3)	sync	04/14/2017
15	18	SOC: Power (2/3)	sync	04/14/2017
16	19	SOC: Power (3/3)	sync	04/14/2017
17	26	NAND	sync	04/14/2017
18	27	SYSTEM POWER: PMU Bucks (1/4)	sync	04/14/2017
19	28	SYSTEM POWER: PMU Bucks (2/4)	sync	04/14/2017
20	29	SYSTEM POWER: PMU LDOs (3/4)	sync	04/14/2017
21	30	SYSTEM POWER: PMU (4/4)	sync	04/14/2017
22	31	SYSTEM POWER: Boost	sync	04/14/2017
23	32	SYSTEM POWER: B2B Battery	sync	04/14/2017
24	33	SYSTEM POWER: Charger	sync	04/14/2017
25	34	SYSTEM POWER: Iktara	sync	04/14/2017
26	35	SYSTEM POWER: B2B Cyclone	sync	04/14/2017
27	36	SENSORS	sync	04/14/2017
28	37	CAMERA: PMU (1/2)	sync	04/14/2017
29	38	CAMERA: PMU (2/2)	sync	04/14/2017
30	39	CAMERA: B2B Wide (KY)	sync	04/14/2017
31	40	CAMERA: B2B Tele (TN)	sync	04/14/2017
32	41	CAMERA: Strobe Drivers	sync	04/14/2017
33	42	CAMERA: FCAM + FOREHEAD	sync	04/14/2017
34	43	CAMERA: B2B Strobe + Buttons	sync	04/14/2017
35	47	AUDIO: CODEC (1/2)	sync	04/14/2017
36	48	AUDIO: CODEC (2/2)	sync	04/14/2017
37	49	AUDIO: Speaker Amp Bottom	sync	04/14/2017
38	50	AUDIO: Speaker Amp Top	sync	04/14/2017
39	51	ARC: Driver	sync	04/14/2017
40	55	CG: Niki	sync	04/14/2017
41	56	CG: PMUs	sync	04/14/2017
42	57	CG: B2B DISPLAY + TOUCH	sync	04/14/2017
43	58	CG: B2B ORB + MESA	sync	04/14/2017
44	59	I/O: Overvoltage Cut-Off Circuit	sync	04/14/2017
45	61	I/O: Accessory Buck	sync	04/14/2017
46	62	I/O: USB PD	sync	04/14/2017
47	63	I/O: Hydra	sync	04/14/2017
48	64	I/O: B2B DOCK	sync	10/10/2016
49	65	SYSTEM: I2C MAP	sync	04/14/2017
50	80	RADIOS	D21_MLB_DOE	07/18/2016
51	1	page1		
52	75	NFC		
53	1	FRONT PAGE		
54	2	HIERARCHY		
55	3	PMIC: BUCKS & LDOS		
56	4	PMIC: CLOCKS & CONTROL		
57	5	BB: POWER		
58	6	BB: CONTROL & HS PERIPHERALS [6]		
59	7	BB: GPIOS & QLINK		
60	8	XCVR		
61	9	XCVR		
62	10	QPOET MODULE		
63	11	LB PAD		
64	12	HB PAD		
65	13	UHB PAD		
66	14	2G PA		
67	15	LB DSM		
68	16	HB DSM		
69	17	COUPLER2		
70	18	LOWER ANTENNA		
71	19	UPPER ANTENNA		
72	20	GNSS		
73	21	SIM, DEBUG CONN		
74	22	TEST POINTS	PROBE POINTS	07/18/2016
75	1	FRONT PAGE		
76	2	METROCIRC		
77	3	UAT MATCH AND TUNER		
78	4	RFFE TO GPO TRANSLATOR		
79	1	SymbolPorts		
80	4	Guinness	WIFI	11/28/2016
81	5	WiFiANTFeeds		11/28/2016

PART#	QTY	DESCRIPTION	REFERENCE DESIGNATOR(S)	BOM OPTION
051-02159	1	SCH,MLB,D21	SCH	?
820-00872	1	PCBF,MLB,D21	PCB	?

Sub Designs

SOURCE PROJECT	SUB-DESIGN NAME	VERSION	HARD/ SOFT	SYNC_DATE/TIME
D21	RADIO_MLB	0.122.0	S	2017_06_06_17:14:31
D20	NFC_MLB	0.50.0	S	2017_05_26_07:54:42
D21	WIFI_MLB	0.20.0	S	2017_05_16_02:56:32
D21	RADIO_MLB_FF	0.35.0	S	2017_06_02_14:56:02

SYNC_MASTER=sync — TABLE OF CONTENTS — SYNC_DATE=06/19/2016

DRAWING TITLE: SCH,MLB,D21

DRAWING NUMBER: 051-02159 — SIZE: D

REVISION: 10.0.0

BRANCH:

PAGE: 1 OF 80

SHEET: 1 OF 81

EEEE Codes

PART#	QTY	DESCRIPTION	REFERENCE DESIGNATOR(S)	CRITICAL	BOM OPTION	
825-7691	1	EEEE FOR (MLB,639-04441,JP,ULTRA)	EEEE_J08R	CRITICAL	EEEE_ULTIMATE	D21x Specific
825-7691	1	EEEE FOR (MLB,639-03377,JP,EXTREME)	EEEE_HNV8	CRITICAL	EEEE_EXTREME	D21x Specific
825-7691	1	EEEE FOR (MLB,639-04442,ROW,ULTRA)	EEEE_J08X	CRITICAL	EEEE_ULTIMATE_ROW	D21x Specific
825-7691	1	EEEE FOR (MLB,639-03380,ROW,EXTREME)	EEEE_HNVF	CRITICAL	EEEE_EXTREME_ROW	D21x Specific

SOC

PART#	QTY	DESCRIPTION	REFERENCE DESIGNATOR(S)	CRITICAL	BOM OPTION	
339S00416	1	SoC,H,3GB 21nm DDR,B1	U1000	CRITICAL	COMMON	D21x Specific

PART NUMBER	ALTERNATE FOR PART NUMBER	BOM OPTION	REF DES	COMMENTS:
339S00415	339S00416	BOM_TABLE_ALTS	U1000	SoC,M,3GB 20nm DDR,B1
339S00417	339S00416	BOM_TABLE_ALTS	U1000	SoC,S,3GB 20nm DDR,B1
339S00418	339S00416	BOM_TABLE_ALTS	U1000	SoC,S,3GB 1xnm DDR,B1
339S00429	339S00416	BOM_TABLE_ALTS	U1000	SoC,H,3GB 20nm DDR,B1
339S00430	339S00416	BOM_TABLE_ALTS	U1000	SoC,M,3GB 20nm DDR,B1
339S00431	339S00416	BOM_TABLE_ALTS	U1000	SoC,S,3GB 20nm DDR,B1
339S00432	339S00416	BOM_TABLE_ALTS	U1000	SoC,S,3GB 18nm DDR,B1

SIPs

PART NUMBER	ALTERNATE FOR PART NUMBER	BOM OPTION	REF DES	COMMENTS:	
339M00011	339M00010	BOM_TABLE_ALTS	M5500	NIKI, STATS SIP	D21x Specific
339M00013	339M00012	BOM_TABLE_ALTS	M4100	HUNT, STATS SIP	

SOFT-TERM CAP SUB BOMS

PART NUMBER	ALTERNATE FOR PART NUMBER	BOM OPTION	REF DES	COMMENTS:	
685-00152	685-00151	BOM_TABLE_ALTS	SUBBOM_CAP	SUBBOM,MLB,CAP,SOFT,D21	
138S00049	138S0831	TYPICAL_CAP	ALL	CAP,0201,2.2UF,6.3V,KYOCERA	To enable alt in SUBBOM

	PART#	QTY	DESCRIPTION	REFERENCE DESIGNATOR(S)	CRITICAL	BOM OPTION	
	685-00151	1	SUBBOM,MLB,SOFT-TERM,D21	SUBBOM_CAP			Default is typical
AGNES OUTPUT	138S00159	9	CAP,SOFT-TERM,2.2uF,6.3V,0201,KYOCERA	C2906,C2961,C2963,C2966,C2967,C2910-C2913		SOFT_CAP	
	138S0831	9	CAP,TYPICAL,2.2UF,6.3V,0201,MURATA	C2906,C2961,C2963,C2966,C2967,C2910-C2913		TYPICAL_CAP	
AGNES INPUT	138S00159	15	CAP,SOFT-TERM,2.2uF,6.3V,0201,KYOCERA	C2851-C2852,C2854-C2860,C2862-C2866,C2868		SOFT_CAP	
	138S0831	15	CAP,TYPICAL,2.2UF,6.3V,0201,MURATA	C2851-C2852,C2854-C2860,C2862-C2866,C2868		TYPICAL_CAP	
	138S00159	10	CAP,SOFT-TERM,2.2uF,6.3V,0201,KYOCERA	C2970-C2972,C2974-C2976,C2979,C2971,C2969,C2961		SOFT_CAP	
	138S0831	10	CAP,TYPICAL,2.2UF,6.3V,0201,MURATA	C2970-C2972,C2974-C2976,C2979,C2971,C2969,C2961		TYPICAL_CAP	
T2	138S00159	2	CAP,SOFT-TERM,2.2uF,6.3V,0201,KYOCERA	C3351,C3352		SOFT_CAP	
	138S0831	2	CAP,TYPICAL,2.2UF,6.3V,0201,MURATA	C3351,C3352		TYPICAL_CAP	
SENSORS	138S00159	3	CAP,SOFT-TERM,2.2uF,6.3V,0201,KYOCERA	C3602,C3611,C3622		SOFT_CAP	
	138S0831	3	CAP,TYPICAL,2.2UF,6.3V,0201,MURATA	C3602,C3611,C3622		TYPICAL_CAP	
ANSEL INPUT	138S00159	5	CAP,SOFT-TERM,2.2uF,6.3V,0201,KYOCERA	C3791,C3795-C3798		SOFT_CAP	
	138S0831	5	CAP,TYPICAL,2.2UF,6.3V,0201,MURATA	C3791,C3795-C3798		TYPICAL_CAP	
RCAM B2Bs	138S00159	3	CAP,SOFT-TERM,2.2uF,6.3V,0201,KYOCERA	C3909,C3925,C3926		SOFT_CAP	
	138S0831	3	CAP,TYPICAL,2.2UF,6.3V,0201,MURATA	C3909,C3925,C3926		TYPICAL_CAP	
FOREHEAD B2Bs	138S00159	2	CAP,SOFT-TERM,2.2uF,6.3V,0201,KYOCERA	C4250,C4261		SOFT_CAP	
	138S0831	2	CAP,TYPICAL,2.2UF,6.3V,0201,MURATA	C4250,C4261		TYPICAL_CAP	
STROBE B2Bs	138S00159	1	CAP,SOFT-TERM,2.2uF,6.3V,0201,KYOCERA	C4303		SOFT_CAP	
	138S0831	1	CAP,TYPICAL,2.2UF,6.3V,0201,MURATA	C4303		TYPICAL_CAP	
AUDIO	138S00159	5	CAP,SOFT-TERM,2.2uF,6.3V,0201,KYOCERA	C4805,C4809,C4914,C4926,C4929		SOFT_CAP	
	138S0831	5	CAP,TYPICAL,2.2UF,6.3V,0201,MURATA	C4805,C4809,C4914,C4926,C4929		TYPICAL_CAP	
	138S00159	5	CAP,SOFT-TERM,2.2uF,6.3V,0201,KYOCERA	C5016,C5018,C5134,C5029,C5136		SOFT_CAP	
	138S0831	5	CAP,TYPICAL,2.2UF,6.3V,0201,MURATA	C5016,C5018,C5134,C5029,C5136		TYPICAL_CAP	
MOJAVE	138S00159	1	CAP,SOFT-TERM,2.2uF,6.3V,0201,KYOCERA	C5611		SOFT_CAP	
	138S0831	1	CAP,TYPICAL,2.2UF,6.3V,0201,MURATA	C5611		TYPICAL_CAP	
DISPLAY B2Bs	138S00159	4	CAP,SOFT-TERM,2.2uF,6.3V,0201,KYOCERA	C5700,C5705,C5716,C5721		SOFT_CAP	
	138S0831	4	CAP,TYPICAL,2.2UF,6.3V,0201,MURATA	C5700,C5705,C5716,C5721		TYPICAL_CAP	
ORB/MESA B2Bs	138S00159	5	CAP,SOFT-TERM,2.2uF,6.3V,0201,KYOCERA	C5802-C5804,C5811,C5880		SOFT_CAP	
	138S0831	5	CAP,TYPICAL,2.2UF,6.3V,0201,MURATA	C5802-C5804,C5811,C5880		TYPICAL_CAP	
MAMBA LDO	138S00159	1	CAP,SOFT-TERM,2.2uF,6.3V,0201,KYOCERA	C5890		SOFT_CAP	
	138S0831	1	CAP,TYPICAL,2.2UF,6.3V,0201,MURATA	C5890		TYPICAL_CAP	
ACC BUCK OUTPUT	138S00159	5	CAP,SOFT-TERM,2.2uF,6.3V,0201,KYOCERA	C6320,C6321,C6322,C6323,C6324		SOFT_CAP	
	138S0831	5	CAP,TYPICAL,2.2UF,6.3V,0201,MURATA	C6320,C6321,C6322,C6323,C6324		TYPICAL_CAP	
	138S00160	4	CAP,SOFT-TERM,10UF,10V,0402,MURATA	C4907,C4903,C4904,C4931		SOFT_CAP	
	138S0979	4	CAP,TYPICAL,10UF,10V,0402,MUR/KYO	C4907,C4903,C4904,C4931		TYPICAL_CAP	
CHESTNUT LDO	138S00160	5	CAP,SOFT-TERM,10UF,10V,0402,MURATA	C5600,C5602,C5603,C5702,C5703		SOFT_CAP	
	138S0979	5	CAP,TYPICAL,10UF,10V,0402,MUR/KYO	C5600,C5602,C5603,C5702,C5703		TYPICAL_CAP	
RCAM (TELE)	138S00159	2	CAP,SOFT-TERM,2.2uF,6.3V,0201,KYOCERA	C4025,C4026		SOFT_CAP	D21x Specific
	138S0831	2	CAP,TYPICAL,2.2UF,6.3V,0201,MURATA	C4025,C4026		TYPICAL_CAP	D21x Specific

IKTARA DIODES SUB BOMS

PART NUMBER	ALTERNATE FOR PART NUMBER	BOM OPTION	REF DES	COMMENTS:
685-00172	685-00171	BOM_TABLE_ALTS	SUBBOM_DS	SUBBOM,MLB,SCHOTTKY DIODES,ONSEMI,D21

#31526972: Update Iktara Diodes APNs

PART#	QTY	DESCRIPTION	REFERENCE DESIGNATOR(S)	CRITICAL	BOM OPTION	
685-00171	1	SUBBOM,MLB,SCHOTTKY DIODES,DIODES,D21	SUBBOM_DS			Footprint is ONSEMI
371S00133	4	DIODES,SHOTTKY DIODE,30V,2A,0603	D3400,D3401,D3402,D3403		DIODES_DS	Primary is DIODES
371S00132	4	ONSEMI,SHOTTKY DIODE,30V,2A,0603	D3400,D3401,D3402,D3403		ONSEMI_DS	

PAGE TITLE
SYSTEM: BOM TABLES (1/2)

DRAWING NUMBER 051-02159
SIZE D
REVISION 10.0.0
BRANCH
PAGE 2 OF 80
SHEET 2 OF 81

NAND BOM Options

PART#	QTY	DESCRIPTION	REFERENCE DESIGNATOR(S)	CRITICAL	BOM OPTION
335S00287	1	NAND,H,ULTRA,TLC	U2600	CRITICAL	ULTIMATE
335S00240	1	NAND,H,EXTREME,TLC	U2600	CRITICAL	EXTREME

PART NUMBER	ALTERNATE FOR PART NUMBER	BOM OPTION	REF DES	COMMENTS:
335S00284	335S00287	BOM_TABLE_ALTS	U2600	T,1z,ULTIMATE
335S00285	335S00287	BOM_TABLE_ALTS	U2600	T,BiCS3,ULTIMATE
335S00288	335S00287	BOM_TABLE_ALTS	U2600	S,BiCS3,ULTIMATE
335S00286	335S00287	BOM_TABLE_ALTS	U2600	SS,3Dv4,ULTIMATE
335S00228	335S00240	BOM_TABLE_ALTS	U2600	T,BiCS3,EXTREME
335S00247	335S00240	BOM_TABLE_ALTS	U2600	S,BiCS3,EXTREME
335S00276	335S00240	BOM_TABLE_ALTS	U2600	SS,3Dv4,EXTREME

Isolator Switch

PART NUMBER	ALTERNATE FOR PART NUMBER	BOM OPTION	REF DES	COMMENTS:
311S00126	311S00114	BOM_TABLE_ALTS	ALL	SPDT,TI

Mamba LDO

PART NUMBER	ALTERNATE FOR PART NUMBER	BOM OPTION	REF DES	COMMENTS:
353S00932	353S00576	BOM_TABLE_ALTS	U5890	STMICRO LDO

Load Switch

PART NUMBER	ALTERNATE FOR PART NUMBER	BOM OPTION	REF DES	COMMENTS:
353S00999	353S01039	BOM_TABLE_ALTS	U6100	TI,LOAD SW,TPS22915C
353S01007	353S01039	BOM_TABLE_ALTS	U6100	ONSEMI,LOAD SW,NCP333

Crystal Alts

PART NUMBER	ALTERNATE FOR PART NUMBER	BOM OPTION	REF DES	COMMENTS:
197S0612	197S00118	BOM_TABLE_ALTS	Y1000	NDK,XTAL,24MHz,1.6x1.2
197S00120	197S00118	BOM_TABLE_ALTS	Y1000	EPSON,XTAL,24MHz,1.6x1.2

CRITICAL PART#	COMMENT
197S00118	XTAL, 24M, 1612, TDK
197S0612	XTAL, 24M, 1612, NDK
197S00120	XTAL, 24M, 1612, EPSON

PMID1 Zener Diode

PART NUMBER	ALTERNATE FOR PART NUMBER	BOM OPTION	REF DES	COMMENTS:
371S00121	371S00030	BOM_TABLE_ALTS	DZ3300	DIODE,ZENER,20V

ZRB Caps

PART#	QTY	DESCRIPTION	REFERENCE DESIGNATOR(S)	CRITICAL	BOM OPTION
138S0683	1	1uF,25V,0402,X5R,10%	C3301	CRITICAL	COMMON

CRITICAL PART#	COMMENT
138S00185	MUR,CAP,ZRB,2.2UF,25V,0402
138S00186	MUR,CAP,ZRB,4.7UF,25V,0603

Global R/C Alternates

PART NUMBER	ALTERNATE FOR PART NUMBER	BOM OPTION	REF DES	COMMENTS:
118S0764	118S0717	BOM_TABLE_ALTS	ALL	RES, 3.92K, 0.1%, 0201
138S0648	138S0652	BOM_TABLE_ALTS	ALL	CAP,X5R,4.7UF,6.3V,0.65MM,0402,TAIYO
138S00024	138S0986	BOM_TABLE_ALTS	ALL	CAP,CER,X7R,0.22UF,20%,6.3V,01005
138S0706	138S0739	BOM_TABLE_ALTS	ALL	CAP,CER,1UF,20%,10V,X5R,0201,MURATA
138S0945	138S0739	BOM_TABLE_ALTS	ALL	CAP,CER,1UF,20%,10V,X5R,0201,KYOCERA
138S0739	138S0706	BOM_TABLE_ALTS	ALL	CAP,CER,X5R,0.22UF,20%,6.3V,20%
132S0436	132S0400	BOM_TABLE_ALTS	ALL	CAP,CER,X5R,0.22UF,20%,6.3V,01005
138S00133	138S00128	BOM_TABLE_ALTS	ALL	CAP,CER,X5R,0.47UF,20%,6.3V,01005
138S00148	138S00150	BOM_TABLE_ALTS	ALL	CAP,0402,15UF,4V,KYOCERA
138S00149	138S00150	BOM_TABLE_ALTS	ALL	CAP,0402,14UF,4V,MURATA
138S00151	138S00150	BOM_TABLE_ALTS	ALL	CAP,0402,15UF,4V,TAIYO
138S00144	138S00143	BOM_TABLE_ALTS	ALL	CAP,0402,26UF,4V,MURATA
138S00143	138S00144	BOM_TABLE_ALTS	ALL	CAP,0402,22UF,4V,KYOCERA
138S00139	138S00138	BOM_TABLE_ALTS	ALL	CAP,0201,4UF,4V,MURATA
138S00138	138S00139	BOM_TABLE_ALTS	ALL	CAP,0201,4.7UF,4V,KYOCERA
138S00145	138S00146	BOM_TABLE_ALTS	ALL	CAP,0402,20UF,6.3V,KYOCERA
138S00141	138S00140	BOM_TABLE_ALTS	ALL	CAP,0201,4UF,6.3V,MURATA
138S00142	138S00140	BOM_TABLE_ALTS	ALL	CAP,0201,3UF,6.3V,SAMSUNG
138S00142	138S00141	BOM_TABLE_ALTS	ALL	CAP,0201,3UF,6.3V,SAMSUNG
138S00049	138S0831	BOM_TABLE_ALTS	ALL	CAP,0201,2.2UF,6.3V,KYOCERA
138S00163	138S00143	BOM_TABLE_ALTS	ALL	CAP,0402,22UF,4V,TY
138S00164	138S00138	BOM_TABLE_ALTS	ALL	CAP,0201,4UF,4V,TY
138S00165	138S00146	BOM_TABLE_ALTS	ALL	CAP,0402,20UF,6.3V,TY
138S00166	138S00140	BOM_TABLE_ALTS	ALL	CAP,0201,4UF,6.3V,TY
138S00140	138S00141	BOM_TABLE_ALTS	ALL	CAP,0201,4UF,6.3V,KYO
138S00048	138S00003	BOM_TABLE_ALTS	ALL	CAP,X5R,15UF,6.3V,0.65MM,0402,KYO
132S0639	132S00088	BOM_TABLE_ALTS	ALL	CAP,X5R,0.47UF,25V,0.33MM,0201,MUR

CRITICAL PART#	COMMENT
118S0717	RES, 3.92K, 0.1%, 0201
138S0652	CAP,X5R,4.7UF,6.3V,0.65MM,0402
138S0706	CAP,CER,X5R,1UF,20%,6.3V,0201
132S0400	CAP,CER,X5R,0.22UF,20%,6.3V,01005
138S0831	CAP,CER,X5R,2.2UF,20%,6.3V,0201
138S00128	CAP,CER,X5R,0.47UF,20%,6.3V,01005

CRITICAL PART#	COMMENT
138S00149	0402-3T,10.5uF@1V

CRITICAL PART#	COMMENT
138S00144	0402,16uF@1V

CRITICAL PART#	COMMENT
138S00139	0201,3uF@1V

CRITICAL PART#	COMMENT
138S00146	0402,5.1uF@3V

CRITICAL PART#	COMMENT
138S00141	0201,1.1uF@3V

Global Ferrites Alternates

PART NUMBER	ALTERNATE FOR PART NUMBER	BOM OPTION	REF DES	COMMENTS:
155S0581	155S00067	BOM_TABLE_ALTS	ALL	FERR, 240OHM, 0.38OHM DCR, 0201
155S00194	155S0610	BOM_TABLE_ALTS	ALL	FERR BD, 150OHM, TDK
155S00200	155S0610	BOM_TABLE_ALTS	ALL	FERR BD, 150OHM, TY
152S00558	152S00557	BOM_TABLE_ALTS	ALL	IND,0.47UH,20%,2.5A,80MO,1608,TY
152S00655	152S00656	BOM_TABLE_ALTS	ALL	IND,MLB,1.0UH,20%,3A,80MO,H=0.65,2016,TY
152S00653	152S00651	BOM_TABLE_ALTS	ALL	IND,MLD,1.2UH,2.8A,100MO
152S00654	152S00652	BOM_TABLE_ALTS	ALL	IND,MLD,1.2UH,20%,3A,72MO,H=0.9MM,2016,CTY
155S00012	155S00168	BOM_TABLE_ALTS	ALL	FLTR, 65 OHMS, 0605
152S00710	152S00617	BOM_TABLE_ALTS	ALL	IND,0.1UH,29MOHM,6.1A,1608,H=.65
152S00711	152S00619	BOM_TABLE_ALTS	ALL	IND,0.1UH,21MOHM,7.2A,2012,H=.65
152S00713	152S00621	BOM_TABLE_ALTS	ALL	IND,0.47UH,35MOHM,3.5A,2012,H=.65
152S00714	152S00622	BOM_TABLE_ALTS	ALL	IND,1UH,100MOHM,2.1A,2012,H=.65
152S00716	152S00626	BOM_TABLE_ALTS	ALL	IND,1UH,78MOHM,2.5A,2012,H=.80
152S00717	152S00631	BOM_TABLE_ALTS	ALL	IND,1UH,60MOHM,3.2A,2016,H=.80
152S00718	152S00632	BOM_TABLE_ALTS	ALL	IND,1UH,52MOHM,3.2A,2016,H=.80
152S00719	152S00639	BOM_TABLE_ALTS	ALL	IND,0.47UH,55MOHM,3.0A,2012,H=.65
152S00720	152S00640	BOM_TABLE_ALTS	ALL	IND,0.47UH,55MOHM,3.0A,2012,H=.65
152S00721	152S00641	BOM_TABLE_ALTS	ALL	IND,1UH,60MOHM,3.6A,2016,H=.80
155S00338	155S0661	BOM_TABLE_ALTS	ALL	FERR BD,330OHM,1.5A,55MOHM DCR,0201
155S00340	155S0876	BOM_TABLE_ALTS	ALL	FERR BD,160OHM,1.1A,50MOHM DCR,0100S
155S00339	155S0660	BOM_TABLE_ALTS	ALL	FERR BD,220OHM,1.8A,40MOHM DCR,0201

BUCK0 Slave
BUCK1 Slave
BUCK8/9/10
Ansel L
BUCK0/2/4/11 Master
BUCK5/7
BUCK1 Slave
Boost Alt
BUCK1 Master

CRITICAL PART#	COMMENT
155S0610	FERR BD, 150OHM, 01005

CRITICAL PART#	COMMENT
152S00617	IND,MLD,0.1UH,20%,6.1A,29MOHM,H=.65,1608
152S00620	IND,MLD,0.1UH,20%,7.2A,17MOHM,H=0.8,2012
152S00621	IND,MLD,0.47UH,20%,3.5A,53MO,H=.65,2012
152S00622	IND,MLD,1.0UH,20%,2.1A,100MO,H=.65,2012
152S00626	IND,MLD,1.5UH,20%,1.1A,160MO,H=.65,2012
152S00631	IND,MLD,1.0UH,20%,2.5A,78MO,H=0.8,2012
152S00632	IND,MLD,1.0UH,20%,3.2A,60MO,H=0.8,2016
152S00640	IND,MLD,0.47UH,3.8A,55MO,H=0.65MM,2012
152S00641	IND,MLD,0.47UH,4A,48MO,H=0.8MM,2012
152S00623	IND,MLD,1UH,3.6A,60MO,H=0.8MM,2016
152S00651	IND,1.2UH, 3A, 2016, 0.65Z
152S00650	IND,0.47UH,6.6A,3225,0.8Z

Multi-Vendor Criticals

CRITICAL PART#	COMMENT
377S0106	SUPPR,TRANS,VARISTOR,12V,33PF,01005
197S0446	XTAL,24MHZ,30PPM,9.5PF,60 OHM MAX,1612
155S0576	FERR BD,10 OHM,50%,750MA,0.07 DCR,01005
155S00168	FLTR,NOISE,65 OHMZ,3.4OHM,0.7-2GHZ,0605
138S0979	CAP,CER,X5R,10UF,20%,10V,0402,H=0.65MM
138S0692	CAP,CER,X5R,1UF,20%,6.3V,0201
138S0683	CAP,CER,X5R,1UF,10%,25V,0402
138S0652	CAP,CER,X5R,4.7UF,20%,6.3V,H=0.65MM,0402
138S00070	CAP,X5R,4.7UF,20%,25V,0402
138S00014	CAP,CER,1UF,20%,16V,X5R,0201,H=0.39MM
132S0664	CAP,CER,0.047UF,10%,25V,X5R,0201
132S0663	CAP,CER,X5R,1UF,10%,25V,0402
132S0534	CAP,CER,X5R,0.1UF,10%,25V,0201
132S0436	CAP,CER,X5R,0.22UF,20%,6.3V,01005
132S0396	CAP,CER,X5R,1000PF,10%,10V,01005
132S0316	CAP,CER,X5R,0.1UF,20%,6.3V,01005
132S0304	CAP,CER,X5R,0.22UF,20%,6.3V,0201
132S0296	CAP,CER,X5R,1000PF,10%,6.3V,01005

CRITICAL PART#	COMMENT
132S0288	CAP,CER,X5R,0.1UF,10%,16V,0201
132S0275	CAP,CER,X5R,470PF,10%,10V,01005
132S0249	CAP,CER,X7R,220PF,10%,10V,01005
132S0245	CAP,CER,X5R,0.01UF,10%,6.3V,01005
132S00093	CAP,X5R,0.022UF,20%,6.3V,01005
132S00025	CAP,CER,X5R,0.047UF,20%,6.3V,01005
132S00008	CAP,CER,0.1UF,10%,50V,X7R,0402
131S0883	CAP,CER,NP0/C0G,220PF,2%,50V,0201
131S0804	CAP,CER,27PF,5%,C0G,25V,0201
131S0307	CAP,CER,NP0/C0G,100PF,5%,16V,01005
131S0225	CAP,CER,NP0/C0G,15PF,5%,16V,01005
131S0223	CAP,CER,NP0/C0G,27PF,5%,16V,01005
131S0220	CAP,CER,NP0/C0G,12PF,5%,16V,01005
131S0216	CAP,CER,NP0/C0G,47PF,5%,16V,01005
131S00053	CAP,CER,C0G,220PF,5%,10V,01005
118S00068	RES,MF,1.3 MOHM,1%,200PPM,1/20W,0201
117S0055	RES,MF,1/20W,2M OHM,5,0201,SMD
107S0257	THERMISTOR,NTC,10K OHM,1%,B=3435,01005

PAGE TITLE
SYSTEM: BOM TABLES (2/2)

DRAWING NUMBER 051-02159
SIZE D
REVISION 10.0.0
BRANCH
PAGE 3 OF 80
SHEET 3 OF 81

Current as of D21 MCO 056-03352 REV 42

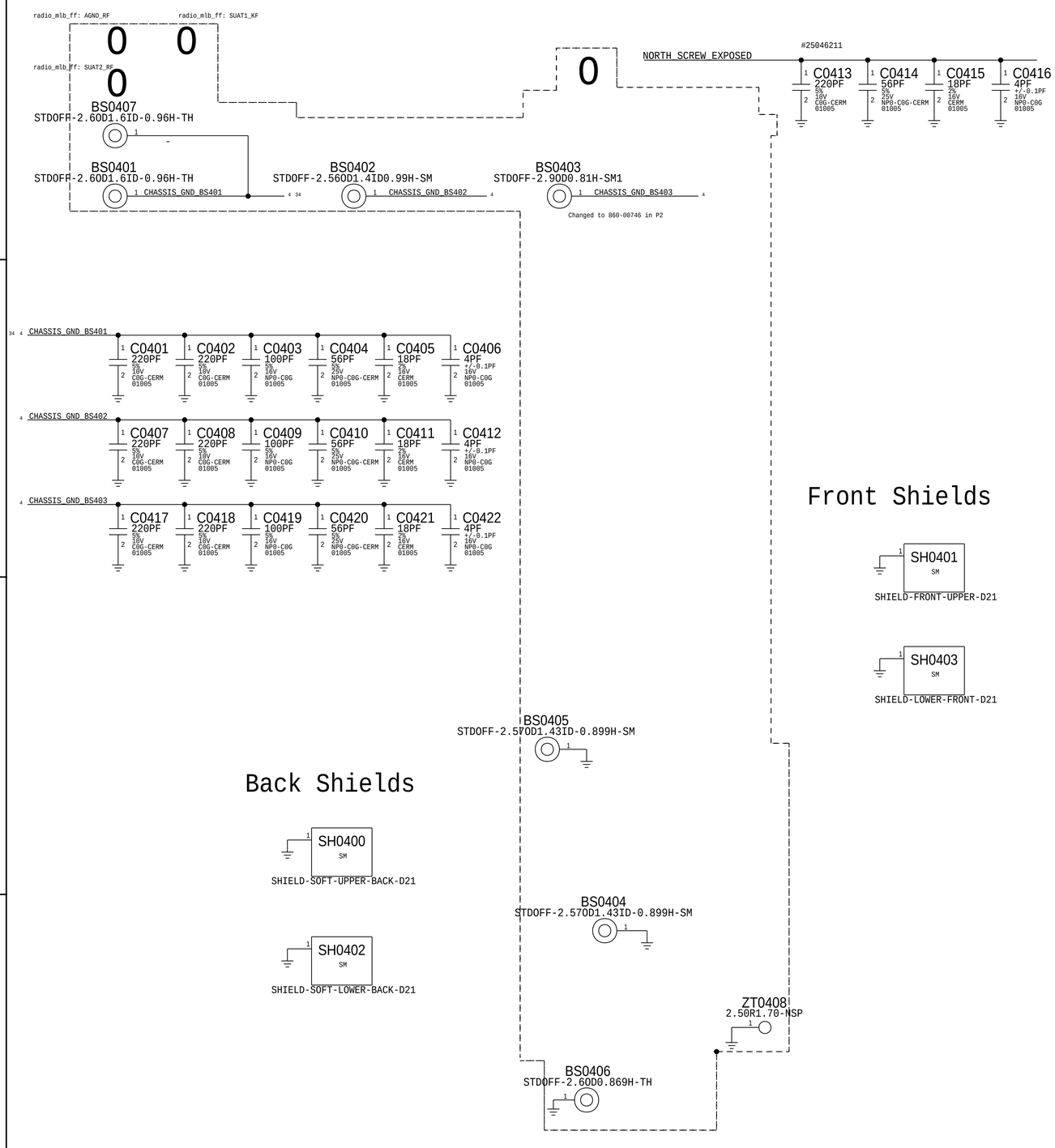

TOP SIDE

FIDUCIALS

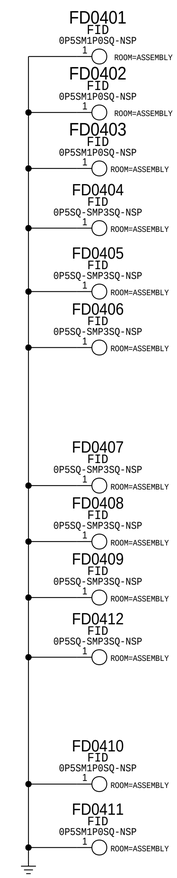

PAGE TITLE	SYSTEM:MECH COMPONENTS
DRAWING NUMBER	051-02159
SIZE	D
REVISION	10.0.0
BRANCH	
PAGE	4 OF 80
SHEET	4 OF 81

Test Points

POWER

Net	Test point	Function
	TP0520	POWER GROUND
PP_VBUS1_E75	TP0521	VBUS1
	TP0527	
PP_VBUS2_IKTARA	TP0541	VBUS2
PP_BATT_VCC	TP0515	VBATT
	TP0522	
PP_VDD_MAIN	TP0525	VDD_MAIN
	TP0526	
	FD0500 (FID, 0P5SM1P0SQ-NSP)	
	TP0528	LVCC TP
LVCC_CPU_GND (XW0520 OMIT, ROOM=SOC, SHORT-20L-0.05MM-SM)	TP0529	LVCC GROUND
IKTARA_COIL1_CONN	TP0523	CALLISTO
IKTARA_COIL2_CONN	TP0524	

DFU

Net	Test point	Function
PMU_HYDRA_TO_AP_FORCE_DFU	TP0514	FORCE DFU
DFU_STATUS	PP0504 (P2MM-NSM)	

E75

Net	Test point	Function
90_HYDRA_DP1_CONN_P	TP0502	
90_HYDRA_DP1_CONN_N	TP0503	
90_HYDRA_DP2_CONN_P	TP0504	
90_HYDRA_DP2_CONN_N	TP0505	
PP_HYDRA_ACC1_CONN	TP0506	ACCESSORY ID AND POWER
PP_HYDRA_ACC2_CONN	TP0507	
	TP0516	TP IS TO HELP WITH USB SI IN THE FACTORY FIXTURE.
HYDRA_CON_DETECT_CONN_L	TP0508	FOR DIAGS

AMUX

Net	Test point	Function
PMU_AMUX_AY	TP0513	ANALOG MUX A OUTPUT
PMU_AMUX_BY	FD0501 (FID, 0P5SM1P0SQ-NSP)	ANALOG MUX B OUTPUT Note: Fiducial used as test point

MOJAVE

Net	Test point
MESA_TO_BOOST_EN_CONN	TP0500
PP16V0_MESA_CONN	TP0501

LCM

Net	Test point	Function
PP_DISPLAY_BL12_CAT1_CONN	TP0530	LCM BACKLIGHT SINK1
PP_DISPLAY_BL34_CAT1_CONN	TP0533	LCM BACKLIGHT SINK3
PP_DISPLAY_BL34_CAT2_CONN	TP0534	LCM BACKLIGHT SINK4
PP_DISPLAY_BL34_ANODE_CONN	TP0535	LCM BACKLIGHT SOURCE (3/4)

SENSE TP

Net	Test point	Function
AP_GPU_GND_SENSE (XW0540 OMIT, SHORT-20L-0.05MM-SM, ROOM=SOC)	TP0540	GPU GROUND SENSE

Sensor SPI

Net	Test point
SPI_AOP_TO_IMU_SCLK	PP0540
SPI_AOP_TO_IMU_MOSI	PP0541
SPI_IMU_TO_AOP_MISO	PP0542
SPI_AOP_TO_COMPASS_CS_L	PP0543
COMPASS_TO_AOP_INT	PP0544
PHOSPHORUS_TO_AOP_INT	PP0545

Probe Points

SOC Debug

Net	Probe point
AP_TO_PMU_TEST_CLKOUT	PP0500
BOARD_ID0	PP0501
AP_DEBUG3	PP0503

SOC CPU/GPU

BUCK1_FB (MAKE_BASE=TRUE)

Per #27963227: BUCK1 is GPU
Change to BUCK1_FB to save 1 via in layout

Net	Probe point
BUCK1_FB → XW0510 (OMIT, ROOM=SOC, SHORT-20L-0.05MM-SM) → PP_GPU_LVCC	TP0510
PP_CPU_PCORE → XW0511 (OMIT, ROOM=SOC, SHORT-20L-0.05MM-SM) → PP_CPU_PCORE_LVCC	TP0511
AP_CPU_PCORE_SENSE	PP0512
AP_VDD_GPU_SENSE	PP0513
TP_SOC_SENSE	PP0514
TP_VSS_CPU_SENSE	PP0515
TP_VSS_SENSE	PP0516

PMU Debug

Net	Probe point
AOP_TO_DDR_SLEEP1_READY	PP0520
SPMI_PMU_BI_PMGR_SDATA	PP0521
#29098531:GPU THROTTLE PMU_TO_AP_THROTTLE_GPU1_L	PP0522
#29282469:SOCHOT AP_TO_PMU_SOCHOT_L	PP0523
#29162687:CODEC BCLK I2S_CODEC_ASP1_TO_AOP_AMPS_BCLK_R	PP0524
#29794618:CCG2 CCG2_TO_SMC_INT_L	PP0525
HYDRA HYDRA_TO_TIGRIS_VBUS1_VALID_L	PP0550

PCIE Refclk

Net	Probe point
90_PCIE_AP_TO_NAND_REFCLK_P	PP0530
90_PCIE_AP_TO_NAND_REFCLK_N	PP0531

SOC DDR

Net	Probe point
TP_VDD_DCS_SENSE	PP0508
TP_DDR_VSS_SENSE	PP0509
TP_VDDQL_SENSE	PP0510

NAND Debug

Net	Probe point
SWD_AP_BI_NAND_SWDIO	PP0560
SWD_AOP_TO_MANY_SWCLK	PP0561
SPI_S4E_TO_AP_MISO_BOOT_CONFIG2	PP0562
NAND_ANI1_VREF	PP0563
NAND_ANI0_VREF	PP0564

BB UAT Debug

Net	Probe point
PP3V0_S2	PP0580
PP1V8_S2	PP0581
UAT_TUNER_RFFE_CLK	PP0582
UAT_TUNER_RFFE_DATA	PP0583

BACKLIGHT Debug

Net	Probe point
DWI_PMGR_TO_BACKLIGHT_DATA	PP0590
DWI_PMGR_TO_BACKLIGHT_CLK	PP0591

RF Debug

Net	Probe point
WLAN_TO_AP_TIME_SYNC	PP0595
AP_TO_NFC_FW_DWLD_REQ	PP0596

PAGE TITLE	SYSTEM: Testpoints
DRAWING NUMBER	051-02159
SIZE	D
REVISION	10.0.0
BRANCH	
PAGE	5 OF 80
SHEET	5 OF 81

BOOTSTRAPPING:BOARD REV
BOARD ID
BOOT CONFIG

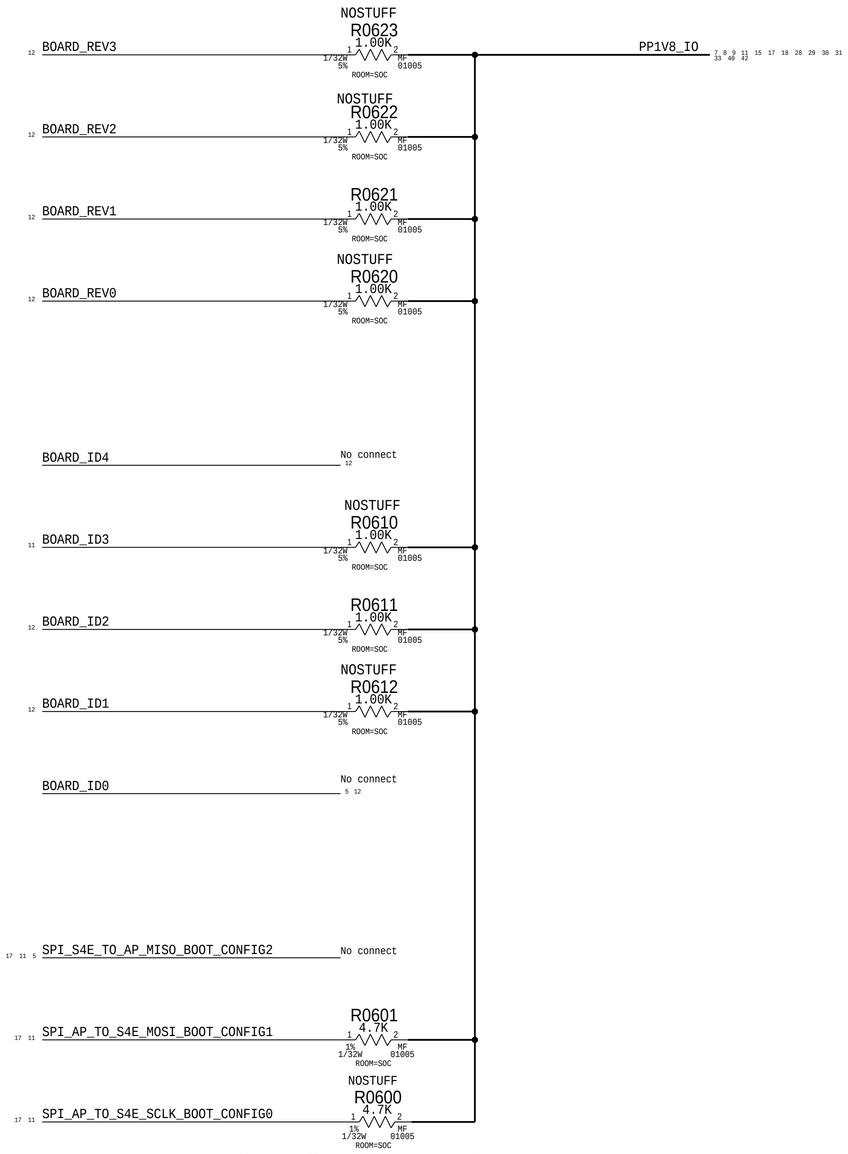

#30903807:Nostuff R0600 to move to PoR BOOT_CONFIG

BOARD_REV[3:0]
FLOAT=LOW, PULLUP=HIGH

	1111	Pre-Proto (Placeholder)
	1110	PROTO1
	1101	SPARE
	1100	PROTO2
	1011	PROTO2 (HALOGEN DOE)
	1001	PROTO2v5
	xxxx	SPARES
	1000	EVT
	xxxx	SPARES
	0100	CARRIER
	xxxx	SPARE
SELECTED -->	0010	DVT
	xxxx	SPARE
	0000	PVT

Note: Future board revs TBD

BOARD_ID[4:0]
FLOAT=LOW, PULLUP=HIGH

	00010	D20 MLB
	00011	D20 DEV
SELECTED -->	00100	D21 MLB
	00101	D21 DEV
	01010	D201 MLB
	01011	D201 DEV
	01100	D211 MLB
	01101	D211 DEV

0=MLB, 1=DEV
01=D20x, 10=D21x
0=EUREKA, 1=KAROO

BOOT_CONFIG[2:0]
FLOAT=LOW, PULLUP=HIGH

	000	SPI0
	001	SPI0 TEST MODE
SELECTED -->	010	SPI0 NAND
	011	SPI0 NAND TEST
	100	n/a
	101	n/a
	110	SLOW SPI0 TEST
	111	FAST SPI0 TEST

SYNC_MASTER=sync SYNC_DATE=09/19/2016

PAGE TITLE
BOOTSTRAPPING

DRAWING NUMBER 051-02159
SIZE D
REVISION 10.0.0
BRANCH
PAGE 6 OF 80
SHEET 6 OF 81

SOC - USB, JTAG, XTAL

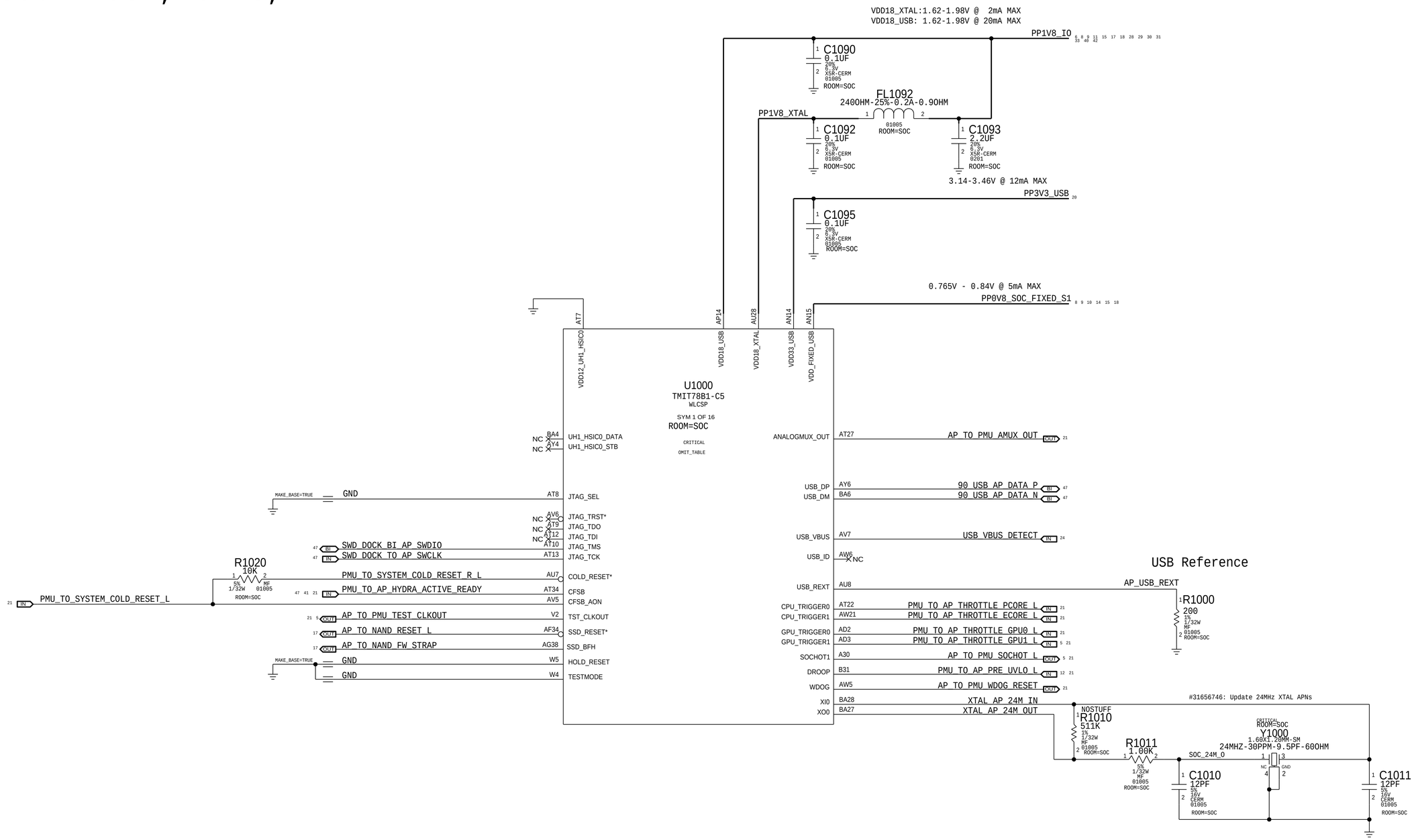

PAGE TITLE	SOC: JTAG,USB,XTAL
DRAWING NUMBER	051-02159
SIZE	D
REVISION	10.0.0
BRANCH	
PAGE	10 OF 80
SHEET	7 OF 81

SOC - PCIE INTERFACES

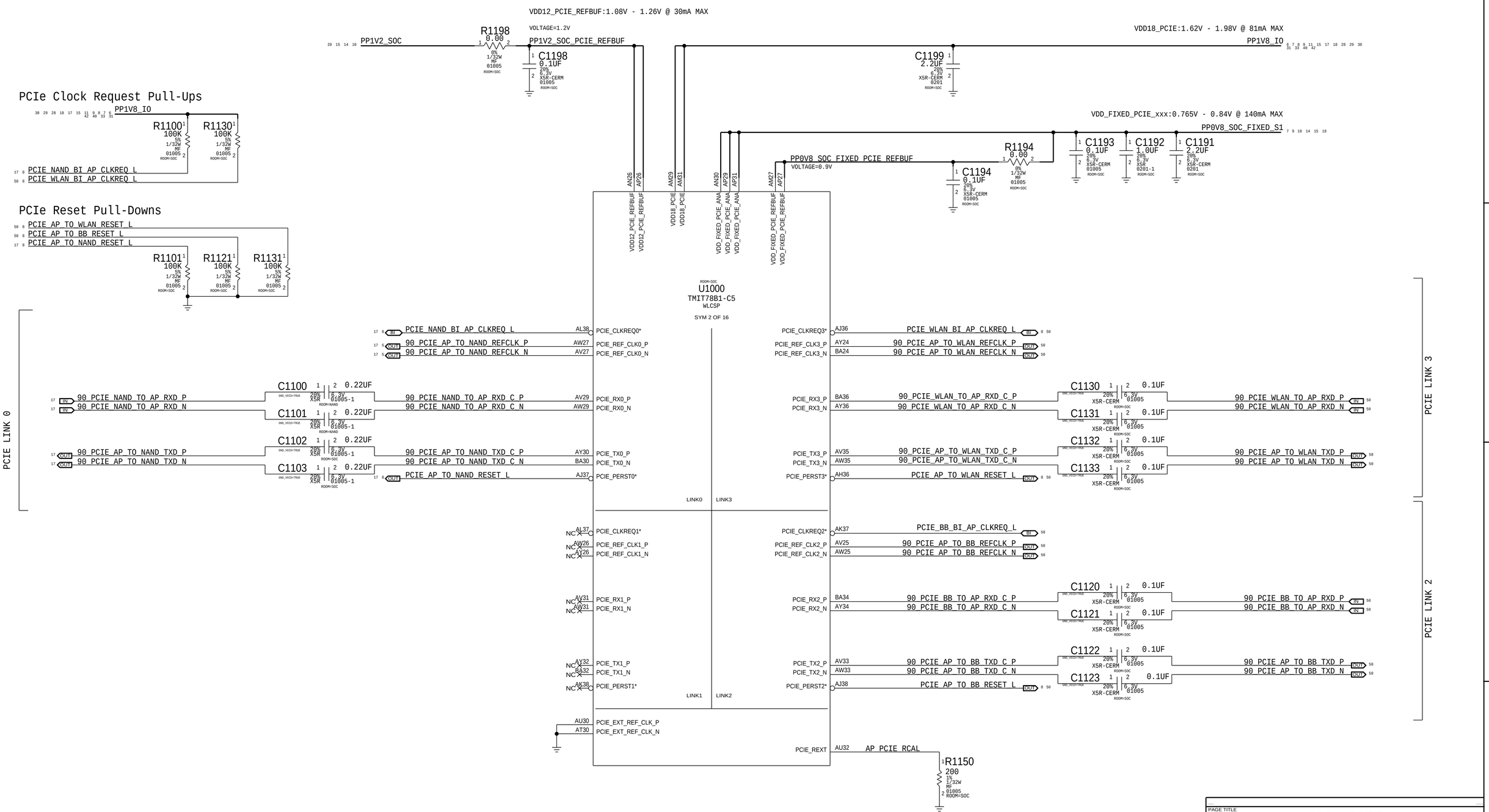

PAGE TITLE	SOC: PCIE
DRAWING NUMBER	051-02159
SIZE	D
REVISION	10.0.0
BRANCH	
PAGE	11 OF 80
SHEET	8 OF 81

SOC - MIPI & ISP INTERFACES

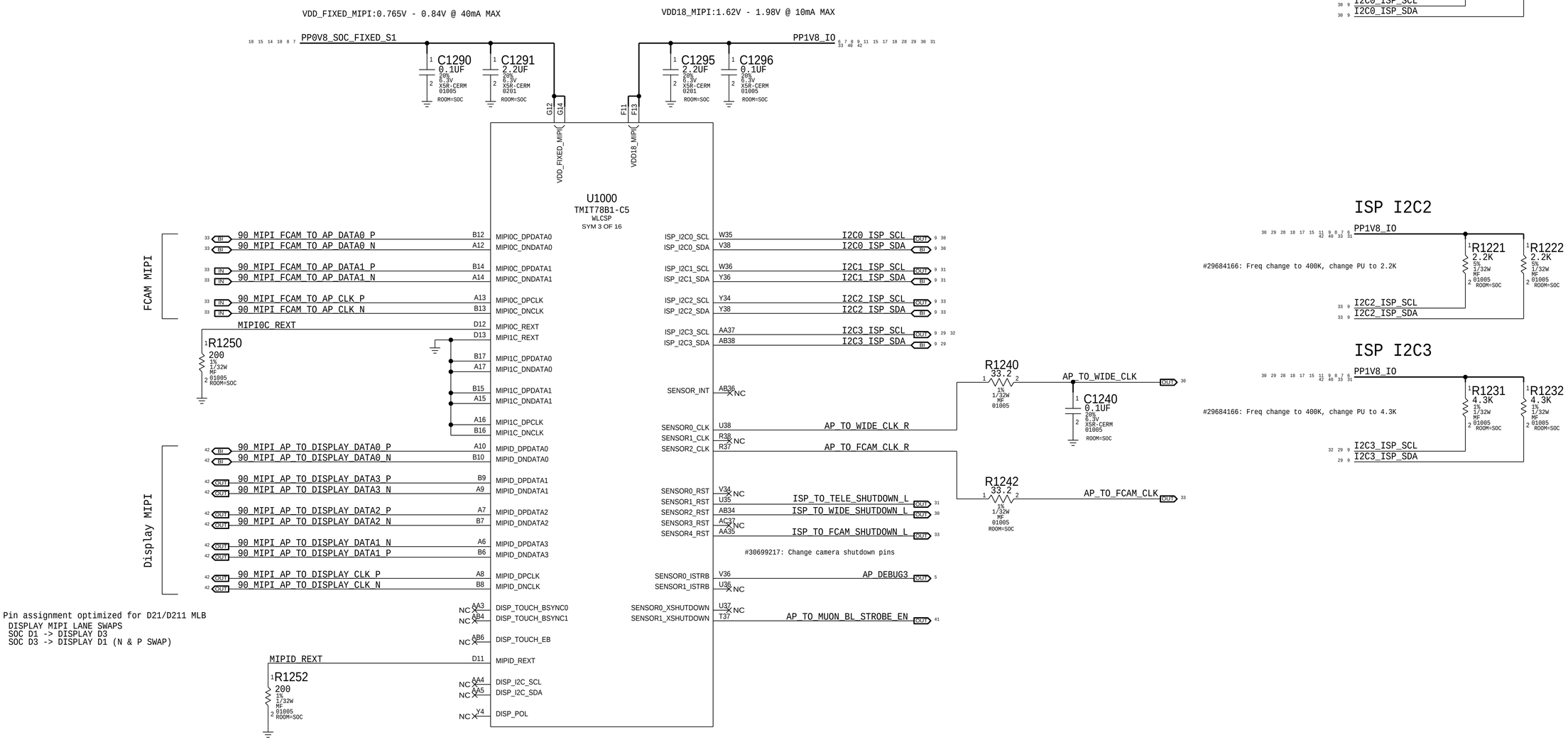

PAGE TITLE	SOC: MIPI + ISP
DRAWING NUMBER	051-02159
SIZE	D
REVISION	10.0.0
BRANCH	
PAGE	12 OF 80
SHEET	9 OF 81

SOC - LPDP INTERFACES

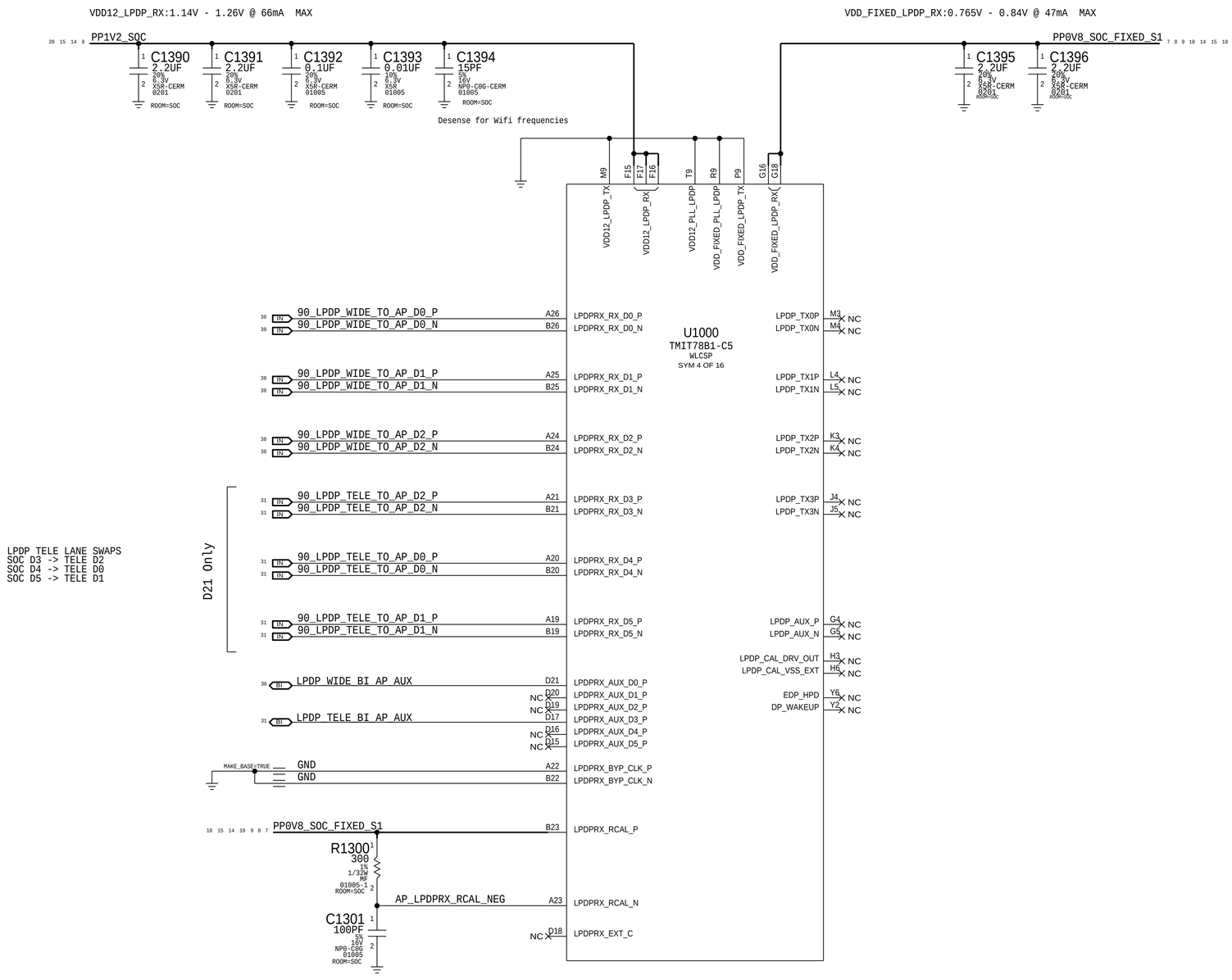

PAGE TITLE	SOC: LPDP
DRAWING NUMBER	051-02159
SIZE	D
REVISION	10.0.0
BRANCH	
PAGE	13 OF 80
SHEET	10 OF 81

SOC - SERIAL INTERFACES

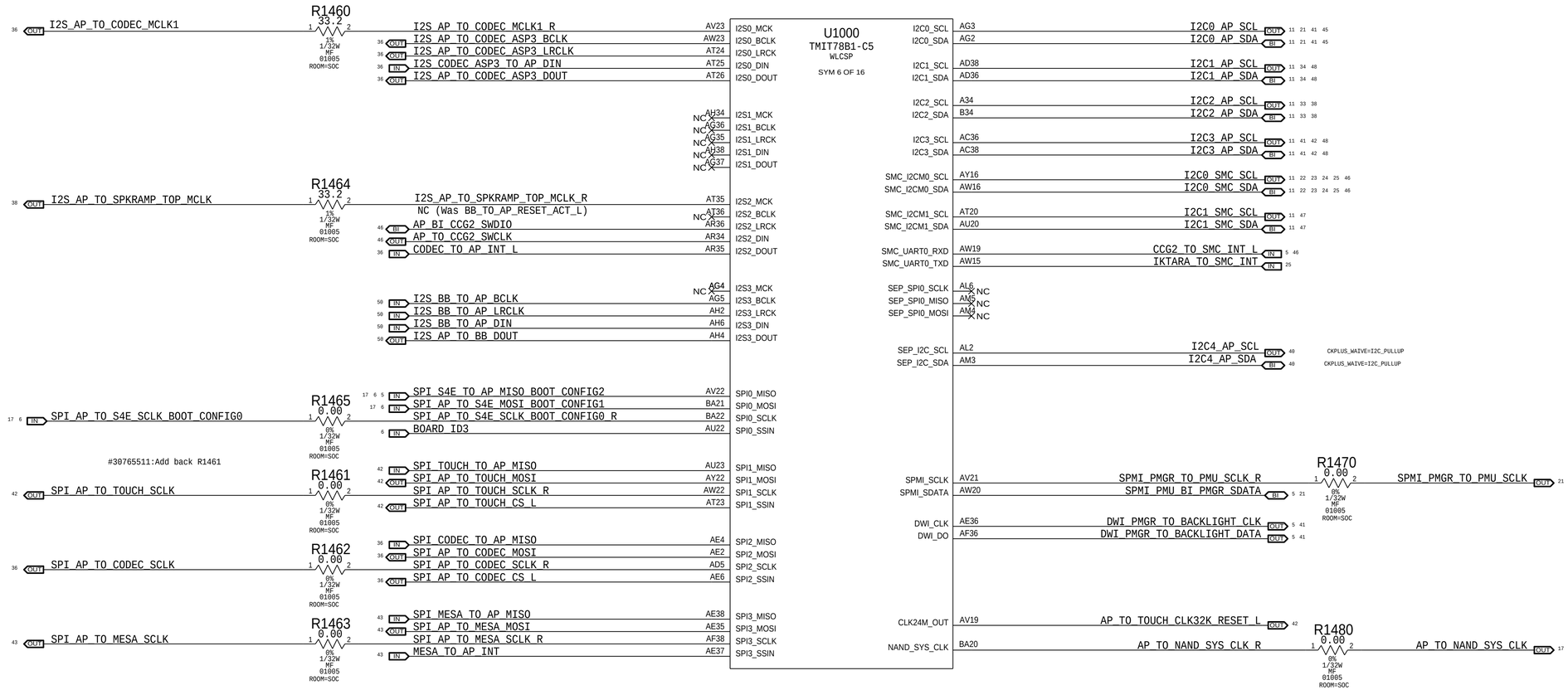

SPI: Route as Daisy-Chain (No T's Allowed)

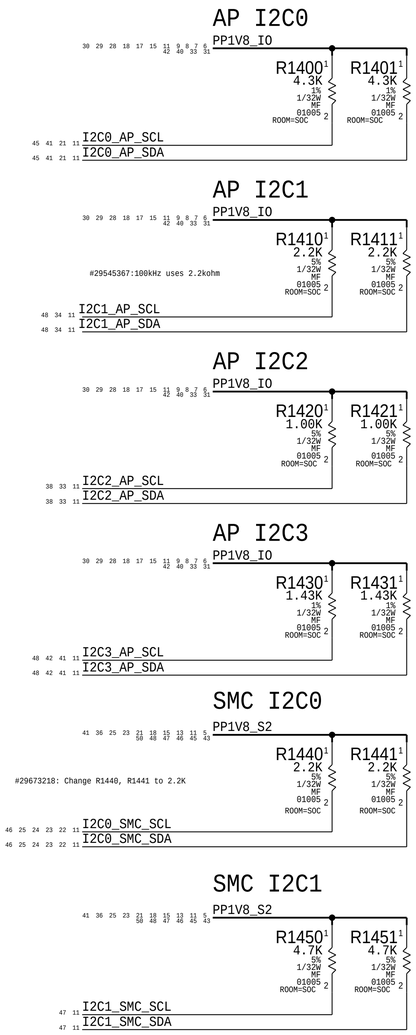

PAGE TITLE	SOC: SERIAL + SMC
DRAWING NUMBER	051-02159
SIZE	D
REVISION	10.0.0
BRANCH	
PAGE	14 OF 80
SHEET	11 OF 81

SOC - GPIO INTERFACES

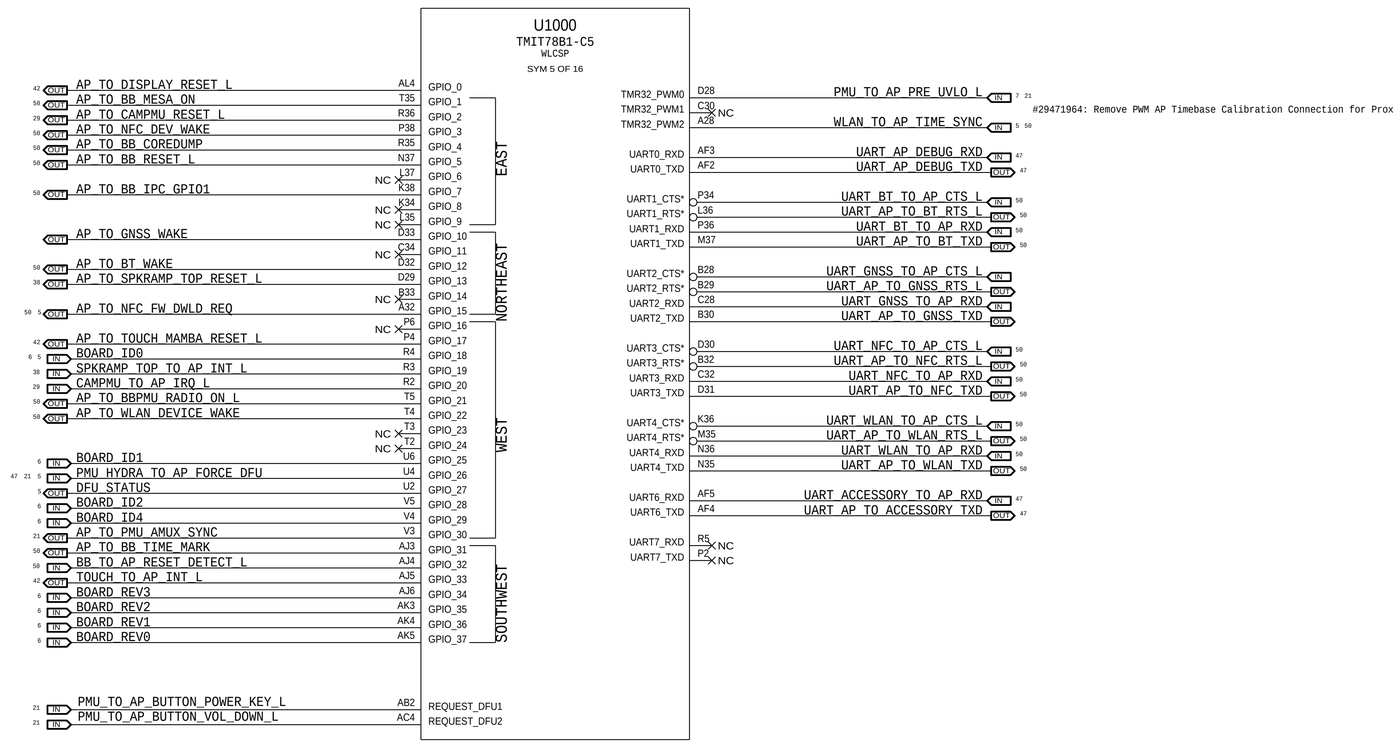

#29471964: Remove PWM AP Timebase Calibration Connection for Prox

PAGE TITLE	SOC: GPIO + UART
DRAWING NUMBER	051-02159
SIZE	D
REVISION	10.0.0
BRANCH	
PAGE	15 OF 80
SHEET	12 OF 81

SOC - AOP

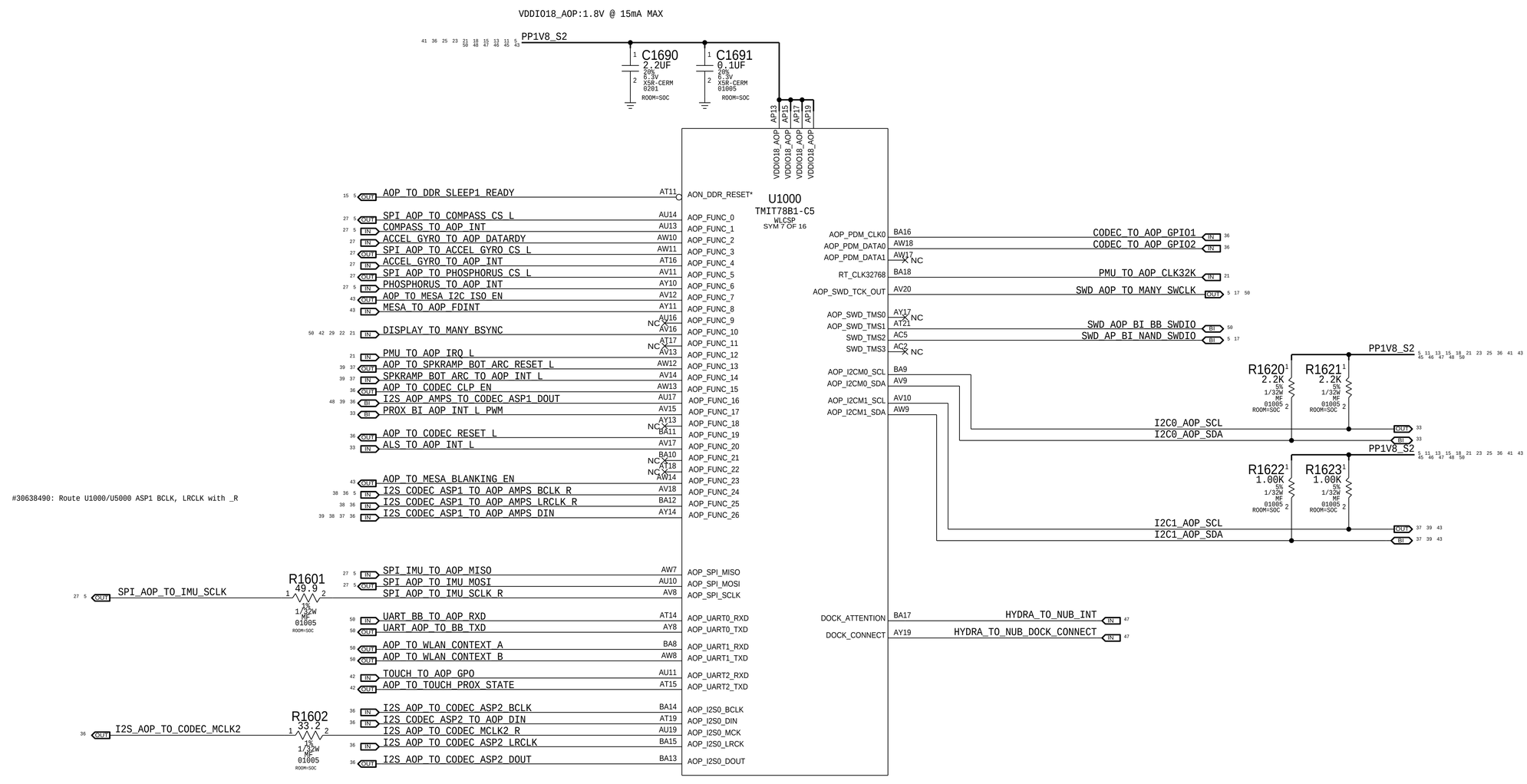

PAGE TITLE	SOC: AOP
DRAWING NUMBER	051-02159
SIZE	D
REVISION	10.0.0
BRANCH	
PAGE	16 OF 80
SHEET	13 OF 81

SOC - CPU, GPU & SOC RAILS

1.06V @ 11.0A MAX
0.8V @ 6A MAX
0.575V @ 2.7A MAX
PP_CPU_PCORE

C1702 4.7UF 20% 4V CER-X5R 0201 ROOM=SOC
C1703 4.7UF 20% 4V CER-X5R 0201 ROOM=SOC

OMIT XW1701 SHORT-20L-0.05MM-SM ROOM=SOC
BUCK0_FB OUT 18

C1704 15UF 20% 4V X5R 0402-D2X-1
C1705 15UF 20% 4V X5R 0402-D2X-1
C1706 15UF 20% 4V X5R 0402-D2X-1
C1707 15UF 20% 4V X5R 0402-D2X-1

C1708 15UF 20% 4V X5R 0402-D2X-1
C1709 15UF 20% 4V X5R 0402-D2X-1
C1710 15UF 20% 4V X5R 0402-D2X-1
C1711 15UF 20% 4V X5R 0402-D2X-1
C1712 15UF 20% 4V X5R 0402-D2X-1
C1713 15UF 20% 4V X5R 0402-D2X-1

U1000 TMIT78B1-C5 WLCSP
SYM 8 OF 16
ROOM=SOC

VDD_CPU: AA14, AA16, AB11, AB13, AB15, AB17, AB19, AC20, AD15, AE14, AF20, AG9, AG15, AH10, AH12, AH14, AH16, AH18, AH20

VDD_GPU: F25, J16, F31, G20, G22, G24, G26, J28, H11, H15, H19, H23, H31, J12, J18, J22, J24, J26, J30, L16, K17, K29, L12, L18, L22, L28, M23, L24, N22, N24, N28

1.06V @ 18.3A MAX
0.8V @ 10.6A MAX
0.575V @ 3.4A MAX
PP_GPU

C1730 4.7UF 20% 4V CER-X5R 0201 ROOM=SOC
C1731 4.7UF 20% 4V CER-X5R 0201 ROOM=SOC

OMIT XW1731 SHORT-20L-0.05MM-SM ROOM=SOC NO_XNET_CONNECTION
BUCK1_FB OUT 5 18

C1734 15UF 20% 4V X5R 0402-D2X-1
C1735 15UF 20% 4V X5R 0402-D2X-1
C1736 15UF 20% 4V X5R 0402-D2X-1
C1737 15UF 20% 4V X5R 0402-D2X-1
C1738 15UF 20% 4V X5R 0402-D2X-1
C1739 15UF 20% 4V X5R 0402-D2X-1
C1740 15UF 20% 4V X5R 0402-D2X-1
C1741 15UF 20% 4V X5R 0402-D2X-1

0.7V @ 75mA MAX
20 PP0V7_VDD_LOW_S2

C1750 4.7UF 20% 4V CER-X5R 0201 ROOM=SOC

VDD_LOW: AM15, AM17, AM19, AM21, AN16, AN18, AN20

1.01V @ 2.1A MAX
0.735V @ 0.6A MAX
19 PP_CPU_SRAM

C1772 15UF 20% 4V X5R 0402-D2X-1
C1773 15UF 20% 4V X5R 0402-D2X-1

VDD_CPU_SRAM: AA12, AB18, AC9, AC14, AE20, AF14, U14

1.06V @ 1.1A MAX
0.80V @ 0.63A MAX
0.675V @ 0.19A MAX
18 PP_GPU_SRAM

C1781 15UF 20% 4V X5R 0402-D2X-1
C1782 15UF 20% 4V X5R 0402-D2X-1

VDD_GPU_SRAM: N26, H13, H17, H21, H25, K11, K19, K23, G30, M29

21 5 OUT AP_CPU_PCORE_SENSE — AH21 VDD_CPU_SENSE

21 5 OUT AP_VDD_GPU_SENSE — N23 VDD_GPU_SENSE

VDD_ECPU: AA10, U10, U12, V13, V15, Y13, Y15

OMIT XW1790 SHORT-20L-0.05MM-SM ROOM=SOC
BUCK11_FB OUT 19 21

1.06V @ 4.3A MAX
0.8V @ 2.8A MAX
0.575V @ 1.4A MAX
PP_CPU_ECORE 19

C1791 15UF 20% 4V X5R 0402-D2X-1
C1792 15UF 20% 4V X5R 0402-D2X-1
C1793 15UF 20% 4V X5R 0402-D2X-1
C1794 4.7UF 20% 4V CER-X5R 0201 ROOM=SOC

VDD_FIXED_CPU W14 — PP0V8_SOC_FIXED_S1 7 8 9 10 14 15 18 — 0.8V @ 6mA MAX
VDD_FIXED_PLL_GPU K21 — PP0V8_SOC_FIXED_S1 7 8 9 10 14 15 18
VDD_FIXED_PLL_SOC L20 — 0.8V @ 6+10=16mA MAX

VDD12_PLL_CPU W16
VDD12_PLL_GPU L21
VDD12_PLL_SOC M20
— PP1V2_SOC 8 10 15 30 — 1.2V @ 7mA MAX (CPU) 1.2V @ 7mA MAX (GPU) 1.2V @ 20mA MAX (SOC)

C1720 0.1UF 20% 6.3V X5R-CERM 01005 ROOM=SOC
C1721 0.1UF 20% 6.3V X5R-CERM 01005 ROOM=SOC
C1722 0.1UF 20% 6.3V X5R-CERM 01005 ROOM=SOC
C1723 2.2UF 20% 6.3V X5R-CERM 0201 ROOM=SOC

0.765V @ 4.9A MAX
0.635V @ 2.6A MAX
PP_SOC_S1 18

C1760 4.7UF 20% 4V CER-X5R 0201 ROOM=SOC
C1761 4.7UF 20% 4V CER-X5R 0201 ROOM=SOC

OMIT XW1760 SHORT-20L-0.05MM-SM ROOM=SOC NO_XNET_CONNECTION
BUCK2_FB OUT 18

C1762 15UF 20% 4V X5R 0402-D2X-1
C1763 15UF 20% 4V X5R 0402-D2X-1
C1764 15UF 20% 4V X5R 0402-D2X-1

U1000 TMIT78B1-C5 WLCSP
SYM 9 OF 16
ROOM=SOC

VDD_SOC: AA9, AA18, AA22, AA24, AA28, AA30, AB21, AB25, AB27, AC22, AC24, AC28, AC30, AD9, AD21, AD25, AD27, AD29, AE22, AE24, AE28, AF25, AF27, AG22, AG24, AG28, AH25, AH27, AJ16, AJ18, AJ22, AJ24, AJ28, AK13, AK15, AK19, AK21, AK25, AK27, AL12, AL16, AL18, AL22, AL24, AL28, AL30, AM13, AM25, AN12, AN22, AN24, F22

G13, J20, L19, M13, M15, M21, N10, N12, N16, N18, N29, P13, P15, P19, P21, P25, P27, R10, R12, R16, R18, R22, R24, R28, T13, T15, T19, T21, T25, T27, U16, U18, U22, U24, U28, U30, V19, V21, V25, V27, W18, W22, W24, W28, W30, Y19, Y25, Y21, Y27

VDD_SOC_SENSE — P23 — TP_SOC_SENSE OUT 5

PAGE TITLE	SOC: Power (1/3)
DRAWING NUMBER	051-02159
SIZE	D
REVISION	10.0.0
BRANCH	
PAGE	17 OF 80
SHEET	14 OF 81

SOC - POWER SUPPLIES

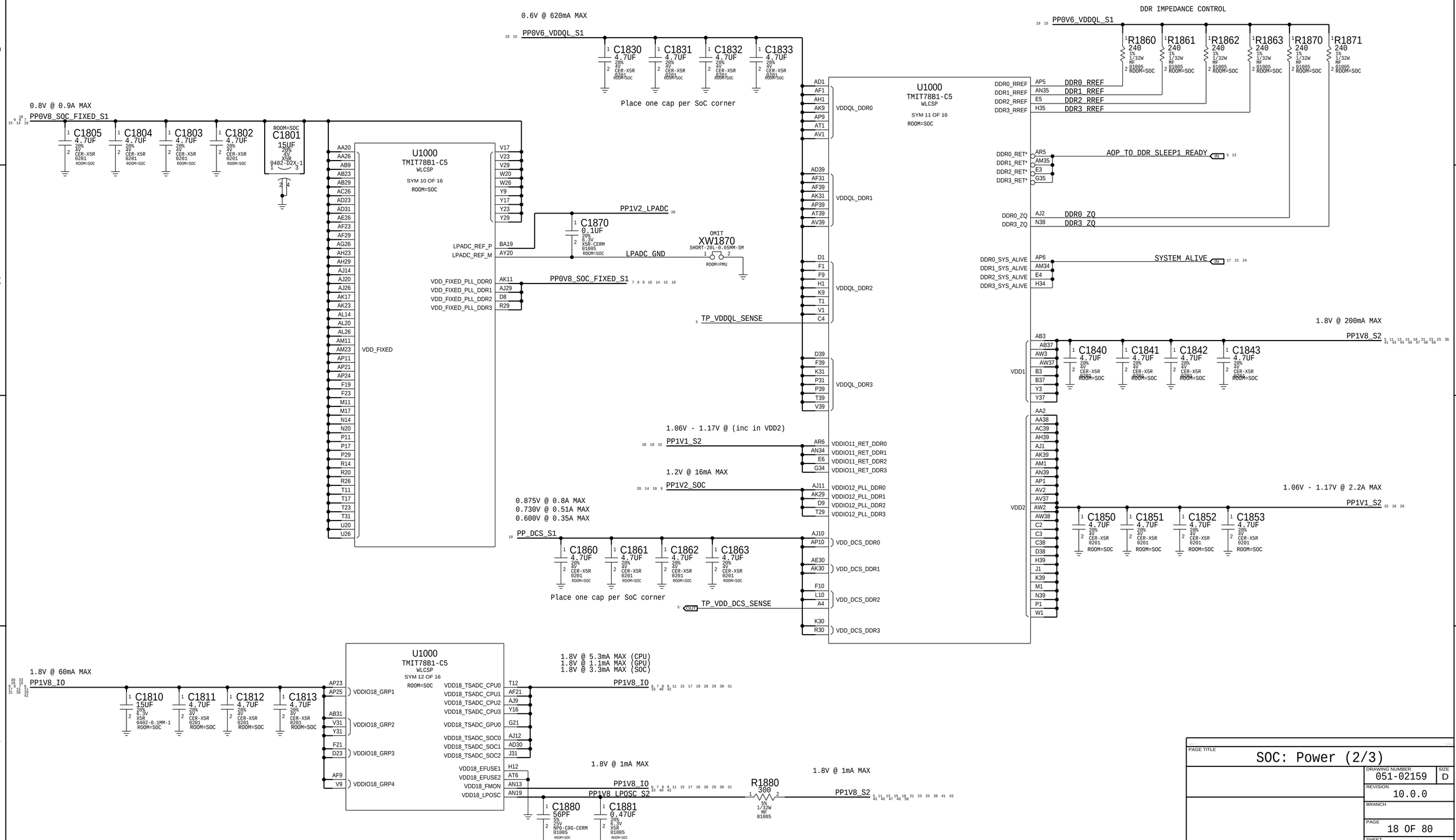

PAGE TITLE	SOC: Power (2/3)
DRAWING NUMBER	051-02159
SIZE	D
REVISION	10.0.0
BRANCH	
PAGE	18 OF 80
SHEET	15 OF 81

SOC - POWER SUPPLIES

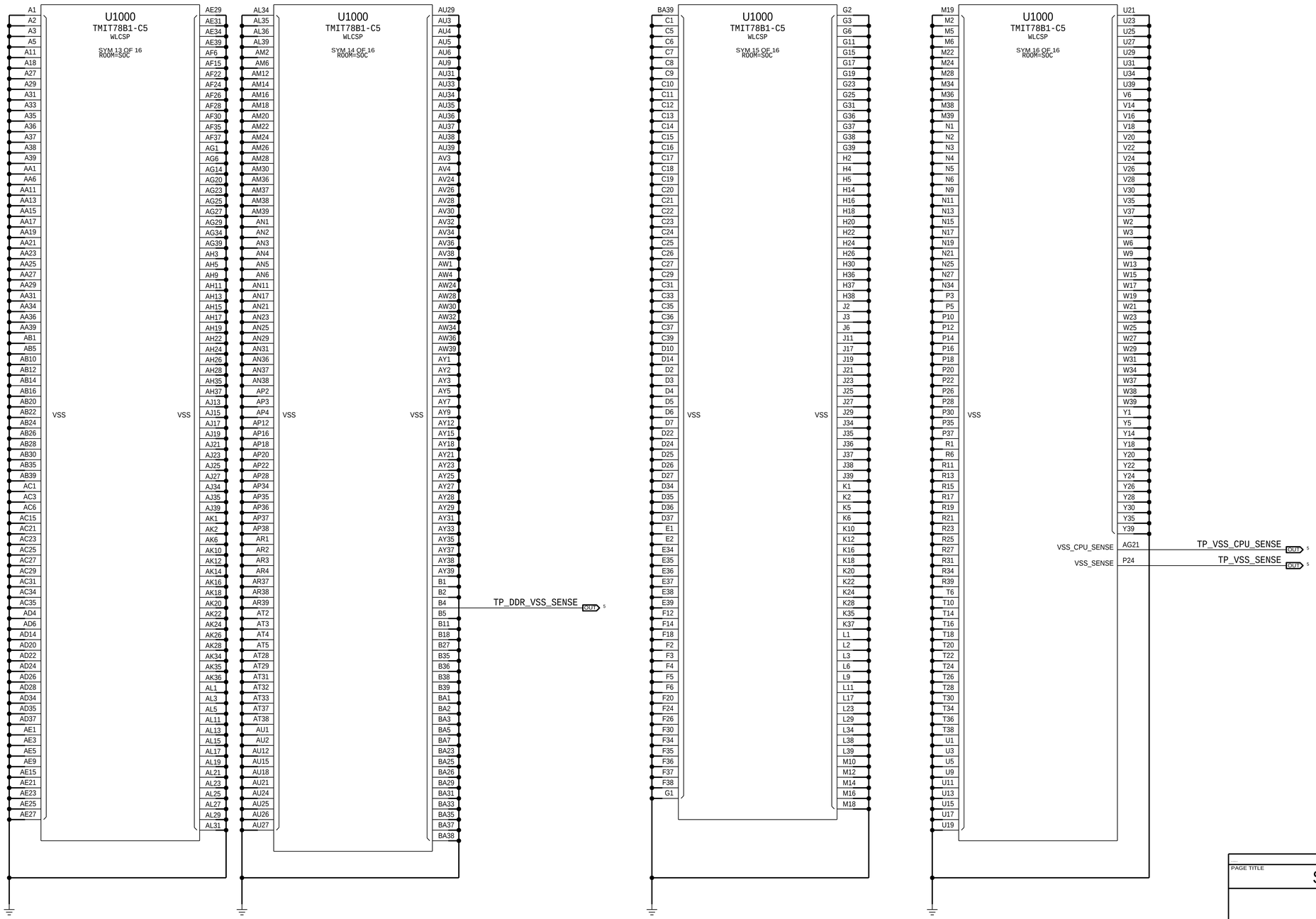

PAGE TITLE	SOC: Power (3/3)
DRAWING NUMBER	051-02159
SIZE	D
REVISION	10.0.0
BRANCH	
PAGE	19 OF 80
SHEET	16 OF 81

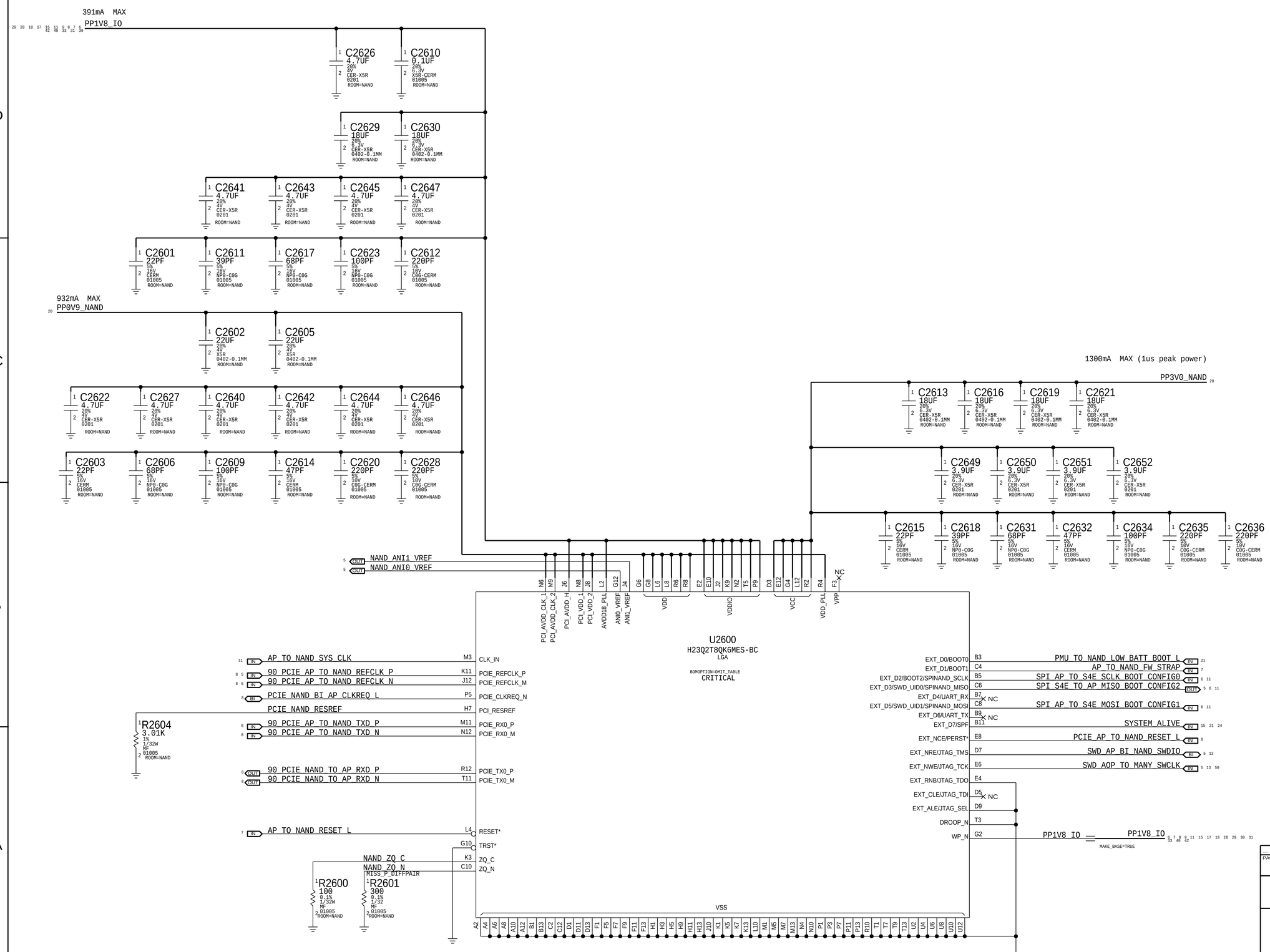

PAGE TITLE	NAND
DRAWING NUMBER	051-02159
SIZE	D
REVISION	10.0.0
BRANCH	
PAGE	26 OF 80
SHEET	17 OF 81

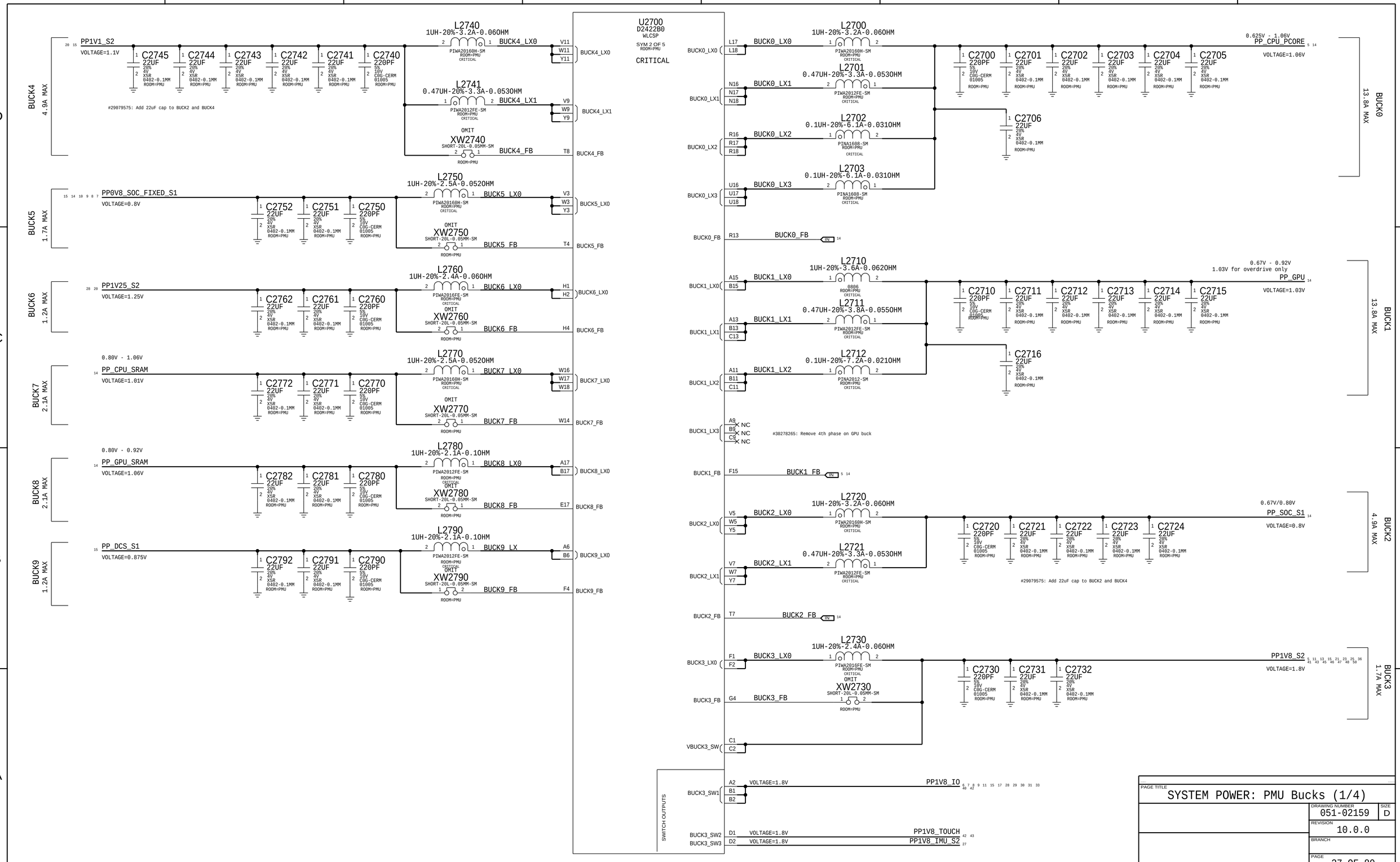

PAGE TITLE
SYSTEM POWER: PMU Bucks (1/4)

DRAWING NUMBER	051-02159
SIZE	D
REVISION	10.0.0
BRANCH	
PAGE	27 OF 80
SHEET	18 OF 81

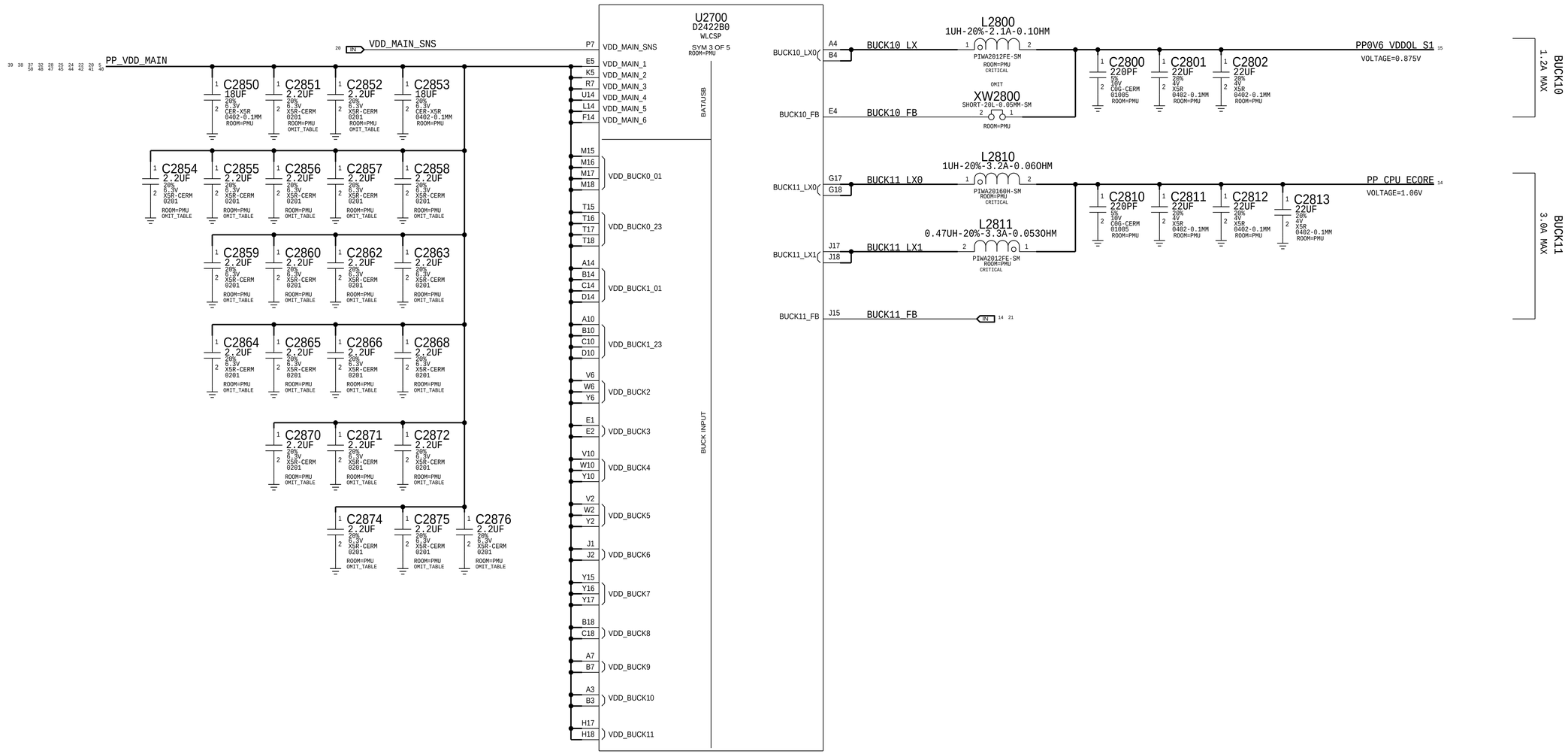

PAGE TITLE
SYSTEM POWER: PMU Bucks (2/4)

DRAWING NUMBER	051-02159
SIZE	D
REVISION	10.0.0
BRANCH	
PAGE	28 OF 80
SHEET	19 OF 81

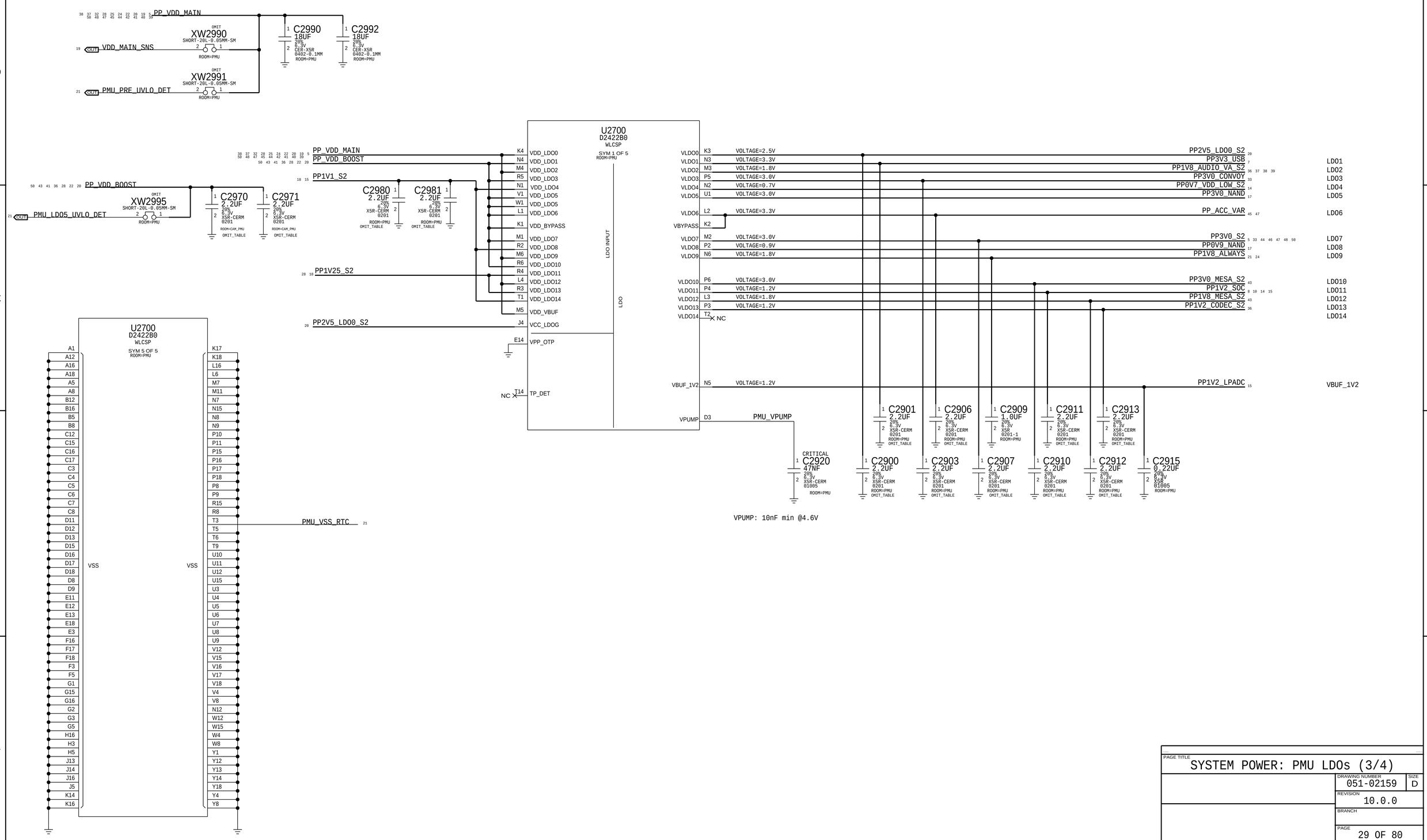

PAGE TITLE	SYSTEM POWER: PMU LDOs (3/4)
DRAWING NUMBER	051-02159
SIZE	D
REVISION	10.0.0
BRANCH	
PAGE	29 OF 80
SHEET	20 OF 81

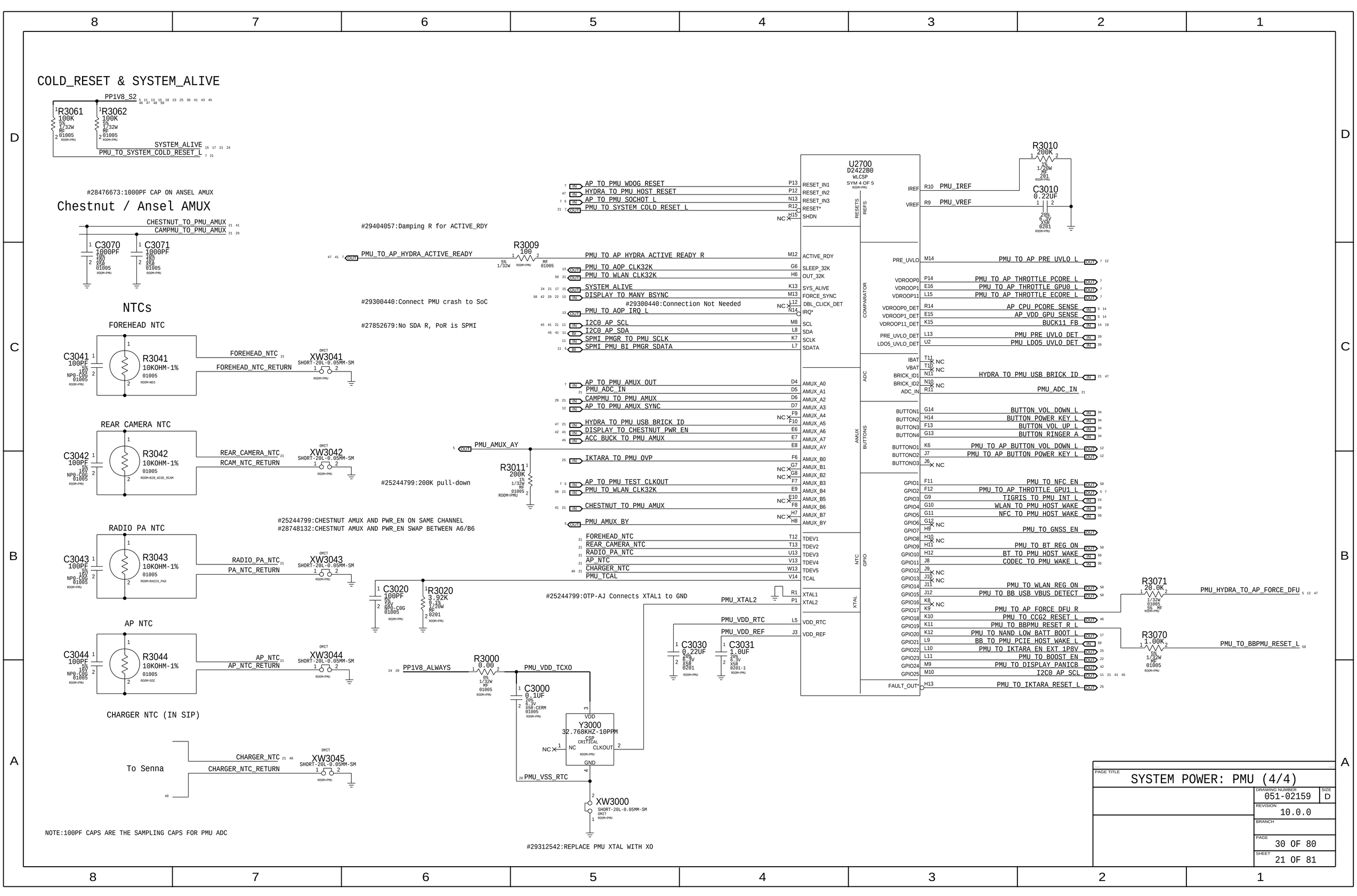
COLD_RESET & SYSTEM_ALIVE
PP1V8_S2
R3061 100K 5% 1/32W MF 01005
R3062 100K 5% 1/32W MF 01005
SYSTEM_ALIVE
PMU_TO_SYSTEM_COLD_RESET_L
#28476673:1000PF CAP ON ANSEL AMUX
Chestnut / Ansel AMUX
CHESTNUT_TO_PMU_AMUX
CAMPMU_TO_PMU_AMUX
C3070 1000PF 10% 10V X5R 01005
C3071 1000PF 10% 10V X5R 01005
NTCs
FOREHEAD NTC
C3041 100PF 5% 16V NP0-C0G 01005
R3041 10KOHM-1% 01005
FOREHEAD_NTC
FOREHEAD_NTC_RETURN
XW3041 SHORT-20L-0.05MM-SM
REAR CAMERA NTC
C3042 100PF 5% 16V NP0-C0G 01005
R3042 10KOHM-1% 01005
REAR_CAMERA_NTC
RCAM_NTC_RETURN
XW3042 SHORT-20L-0.05MM-SM
RADIO PA NTC
C3043 100PF 5% 16V NP0-C0G 01005
R3043 10KOHM-1% 01005
RADIO_PA_NTC
PA_NTC_RETURN
XW3043 SHORT-20L-0.05MM-SM
AP NTC
C3044 100PF 5% 16V NP0-C0G 01005
R3044 10KOHM-1% 01005
AP_NTC
AP_NTC_RETURN
XW3044 SHORT-20L-0.05MM-SM
CHARGER NTC (IN SIP)
To Senna
CHARGER_NTC
CHARGER_NTC_RETURN
XW3045 SHORT-20L-0.05MM-SM
NOTE:100PF CAPS ARE THE SAMPLING CAPS FOR PMU ADC
#29404057:Damping R for ACTIVE_RDY
PMU_TO_AP_HYDRA_ACTIVE_READY
R3009 100 5% 1/32W MF 01005
#29300440:Connect PMU crash to SoC
#27852679:No SDA R, PoR is SPMI
#25244799:200K pull-down
R3011 200K 1% 1/32W MF 01005
PMU_AMUX_AY
#25244799:CHESTNUT AMUX AND PWR_EN ON SAME CHANNEL
#28748132:CHESTNUT AMUX AND PWR_EN SWAP BETWEEN A6/B6
C3020 100PF 5% 16V NP0-C0G 01005
R3020 3.92K 0.1% 1/20W MF 0201
#25244799:OTP-AJ Connects XTAL1 to GND
PP1V8_ALWAYS
R3000 0.00 5% 1/32W MF 01005
PMU_VDD_TCXO
C3000 0.1UF 20% 6.3V X5R-CERM 01005
Y3000 32.768KHZ-10PPM CSP CRITICAL
VDD
CLKOUT
GND
NC
PMU_VSS_RTC
XW3000 SHORT-20L-0.05MM-SM
#29312542:REPLACE PMU XTAL WITH XO
PMU_XTAL2
PMU_VDD_RTC
PMU_VDD_REF
C3030 0.22UF 20% 6.3V X5R 0201
C3031 1.0UF 20% 6.3V X5R 0201-1
U2700 D2422B0 WLCSP SYM 4 OF 5
AP_TO_PMU_WDOG_RESET
HYDRA_TO_PMU_HOST_RESET
AP_TO_PMU_SOCHOT_L
PMU_TO_SYSTEM_COLD_RESET_L
PMU_TO_AP_HYDRA_ACTIVE_READY_R
PMU_TO_AOP_CLK32K
PMU_TO_WLAN_CLK32K
SYSTEM_ALIVE
DISPLAY_TO_MANY_BSYNC
PMU_TO_AOP_IRQ_L
I2C0_AP_SCL
I2C0_AP_SDA
SPMI_PMGR_TO_PMU_SCLK
SPMI_PMU_BI_PMGR_SDATA
AP_TO_PMU_AMUX_OUT
PMU_ADC_IN
CAMPMU_TO_PMU_AMUX
AP_TO_PMU_AMUX_SYNC
HYDRA_TO_PMU_USB_BRICK_ID
DISPLAY_TO_CHESTNUT_PWR_EN
ACC_BUCK_TO_PMU_AMUX
IKTARA_TO_PMU_OVP
AP_TO_PMU_TEST_CLKOUT
PMU_TO_WLAN_CLK32K
CHESTNUT_TO_PMU_AMUX
PMU_AMUX_BY
FOREHEAD_NTC
REAR_CAMERA_NTC
RADIO_PA_NTC
AP_NTC
CHARGER_NTC
PMU_TCAL
R3010 200K 1% 1/20W MF 0201
C3010 0.22UF 20% 6.3V X5R 0201
PMU_IREF
PMU_VREF
PMU_TO_AP_PRE_UVLO_L
PMU_TO_AP_THROTTLE_PCORE_L
PMU_TO_AP_THROTTLE_GPU0_L
PMU_TO_AP_THROTTLE_ECORE_L
AP_CPU_PCORE_SENSE
AP_VDD_GPU_SENSE
BUCK11_FB
PMU_PRE_UVLO_DET
PMU_LDO5_UVLO_DET
HYDRA_TO_PMU_USB_BRICK_ID
PMU_ADC_IN
BUTTON_VOL_DOWN_L
BUTTON_POWER_KEY_L
BUTTON_VOL_UP_L
BUTTON_RINGER_A
PMU_TO_AP_BUTTON_VOL_DOWN_L
PMU_TO_AP_BUTTON_POWER_KEY_L
PMU_TO_NFC_EN
PMU_TO_AP_THROTTLE_GPU1_L
TIGRIS_TO_PMU_INT_L
WLAN_TO_PMU_HOST_WAKE
NFC_TO_PMU_HOST_WAKE
PMU_TO_GNSS_EN
PMU_TO_BT_REG_ON
BT_TO_PMU_HOST_WAKE
CODEC_TO_PMU_WAKE_L
PMU_TO_WLAN_REG_ON
PMU_TO_BB_USB_VBUS_DETECT
PMU_TO_AP_FORCE_DFU_R
PMU_TO_CCG2_RESET_L
PMU_TO_BBPMU_RESET_R_L
PMU_TO_NAND_LOW_BATT_BOOT_L
BB_TO_PMU_PCIE_HOST_WAKE_L
PMU_TO_IKTARA_EN_EXT_1P8V
PMU_TO_BOOST_EN
PMU_TO_DISPLAY_PANICB
I2C0_AP_SCL
PMU_TO_IKTARA_RESET_L
R3071 20.0K 1/32W MF 01005
PMU_HYDRA_TO_AP_FORCE_DFU
R3070 1.00K 5% 1/32W MF 01005
PMU_TO_BBPMU_RESET_L
PAGE TITLE
SYSTEM POWER: PMU (4/4)
DRAWING NUMBER 051-02159
SIZE D
REVISION 10.0.0
BRANCH
PAGE 30 OF 80
SHEET 21 OF 81

BOOST

353S01124

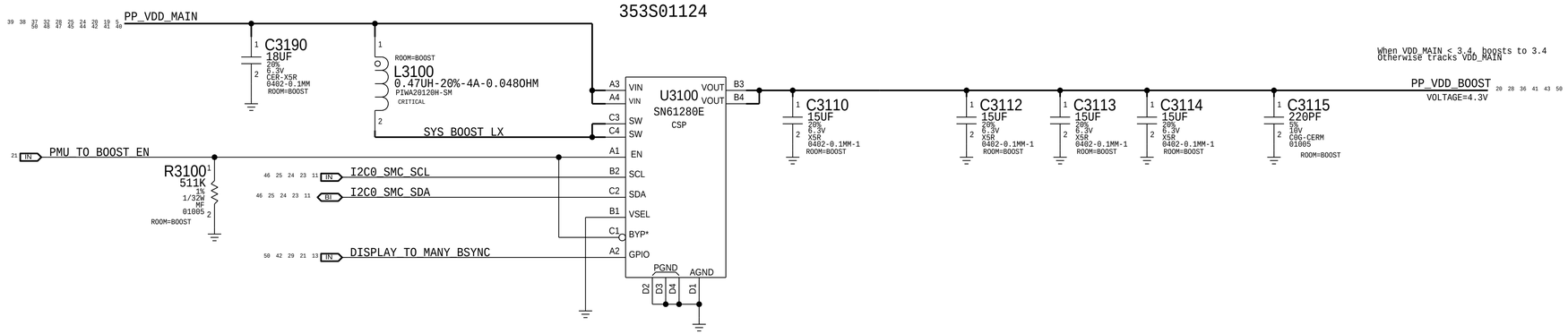

PAGE TITLE	SYSTEM POWER: Boost
DRAWING NUMBER	051-02159
SIZE	D
REVISION	10.0.0
BRANCH	
PAGE	31 OF 80
SHEET	22 OF 81

Battery Connector

THIS ONE ON MLB ---> 516S00232

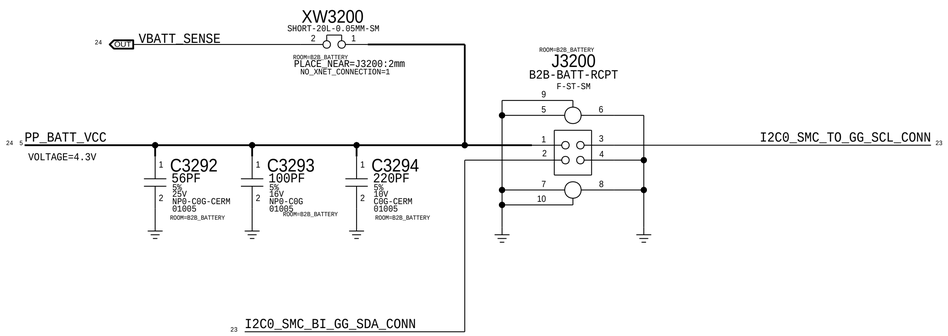

#32515053:Add DZ3200/DZ3201 on I2C CONN with 377S00001
#31734657:Replace battery I2C FETs with 376S00134
Gas gauge I2C level translator

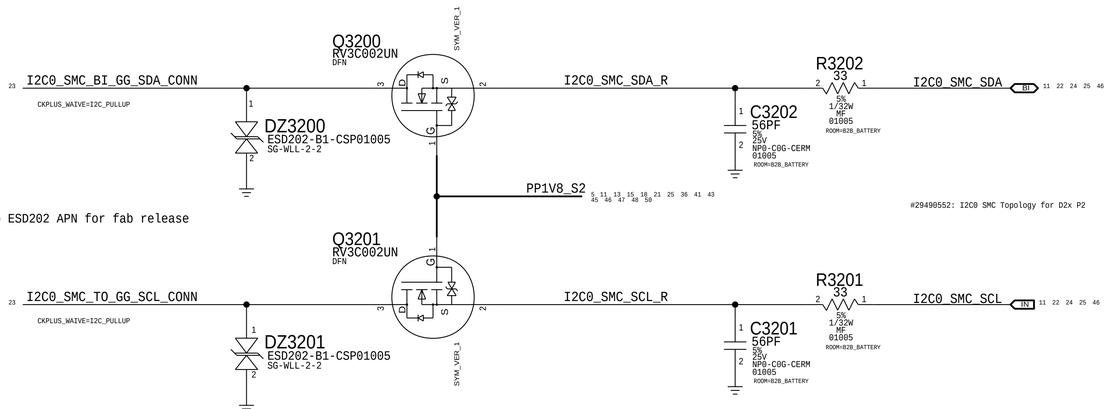

Changed BOM to ESD202 APN for fab release

PAGE TITLE	SYSTEM POWER: B2B Battery
DRAWING NUMBER	051-02159
SIZE	D
REVISION	10.0.0
BRANCH	
PAGE	32 OF 80
SHEET	23 OF 81

Tigris 2

APN:343S00170

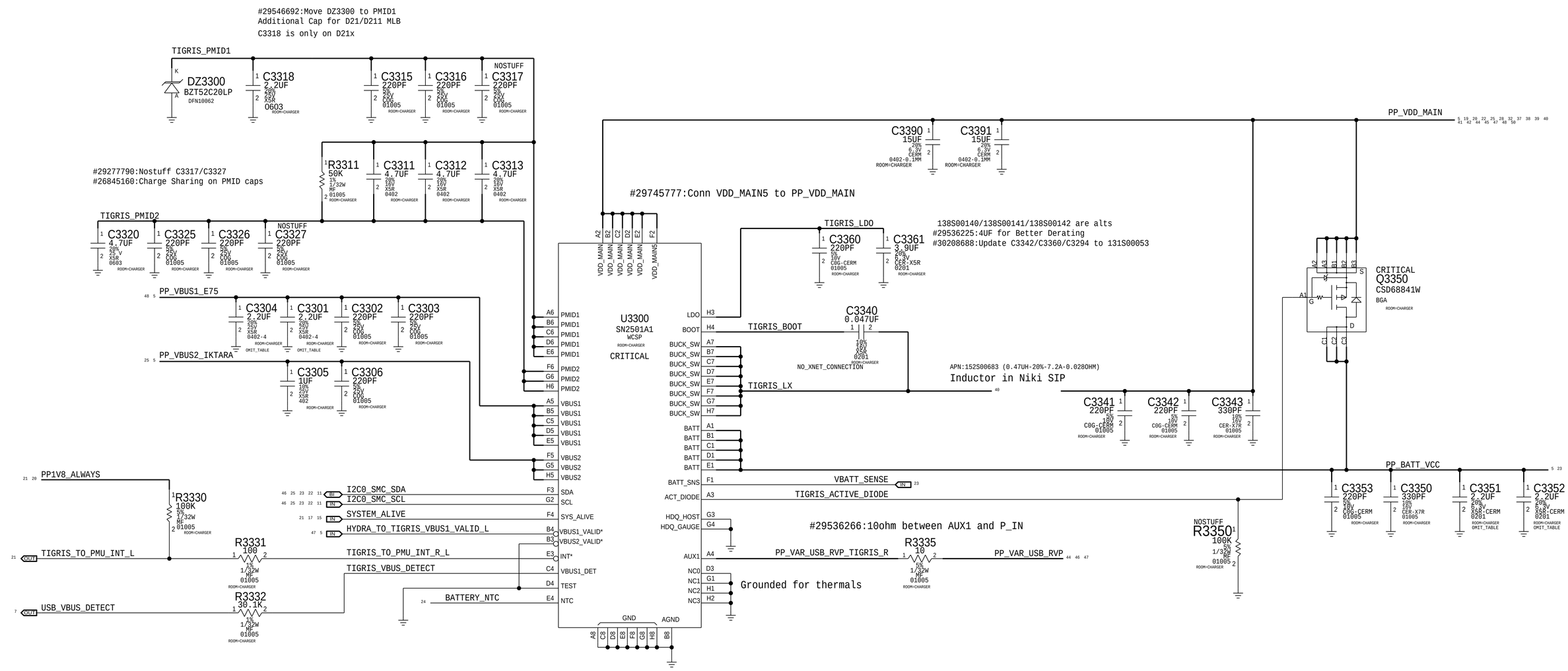

PAGE TITLE	SYSTEM POWER: Charger
DRAWING NUMBER	051-02159
SIZE	D
REVISION	10.0.0
BRANCH	
PAGE	33 OF 80
SHEET	24 OF 81

Iktara

Iktara Debug

IKTARA_GPIO3 — PP3403 P2MM-NSM SM ROOM=TEST
IKTARA_GPIO4 — PP3404 P2MM-NSM SM ROOM=TEST
IKTARA_TO_SMC_INT — PP3405 P2MM-NSM SM ROOM=TEST

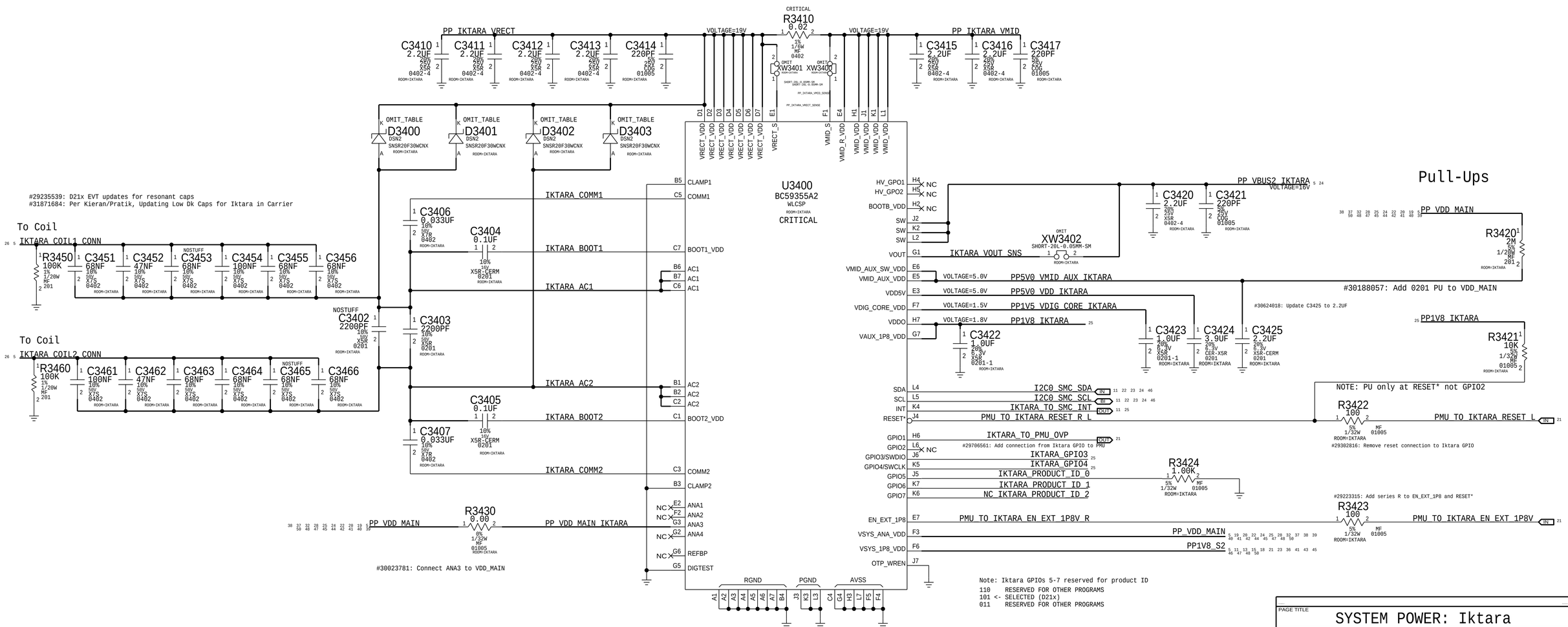

PAGE TITLE	SYSTEM POWER: Iktara
DRAWING NUMBER	051-02159
SIZE	D
REVISION	10.0.0
BRANCH	
PAGE	34 OF 80
SHEET	25 OF 81

Cyclone connector

THIS ONE ON MLB ---> 516S00311

#31690340:Remove XWs on Iktara Coil Paths

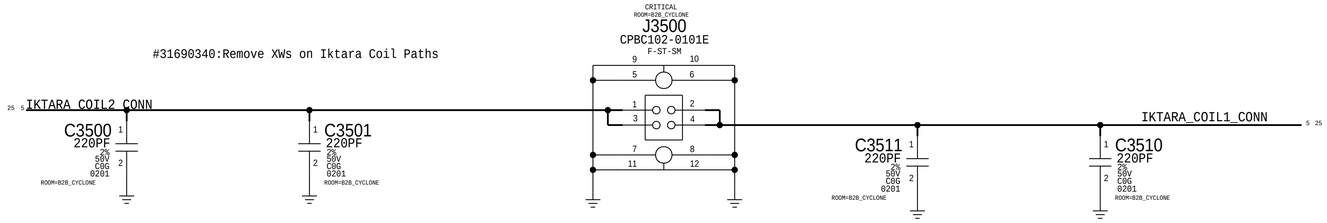

PAGE TITLE	SYSTEM POWER: B2B Cyclone
DRAWING NUMBER	051-02159
SIZE	D
REVISION	10.0.0
BRANCH	
PAGE	35 OF 80
SHEET	26 OF 81

Graphite - Accel & Gyro

APN: 338S00304 (A1)

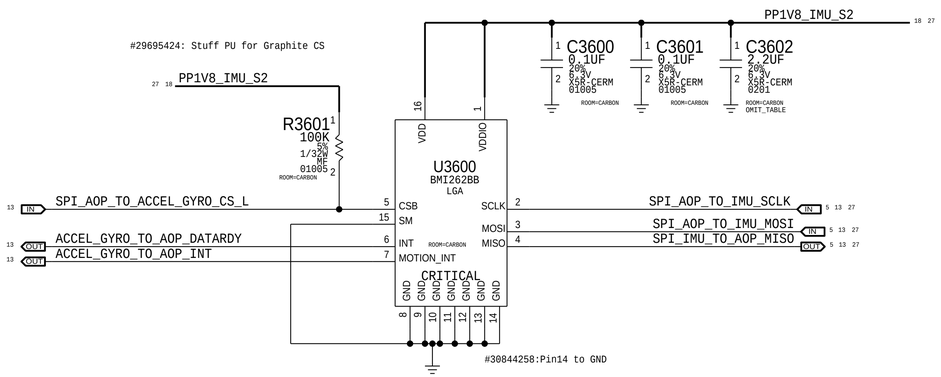

Magnesium - Compass

APN:338S00084

Shared decoupling with Phosphorus

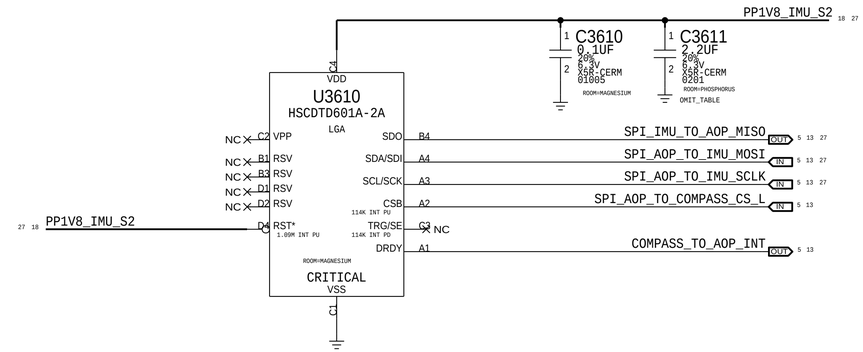

North Speaker Compass Compensation Coil

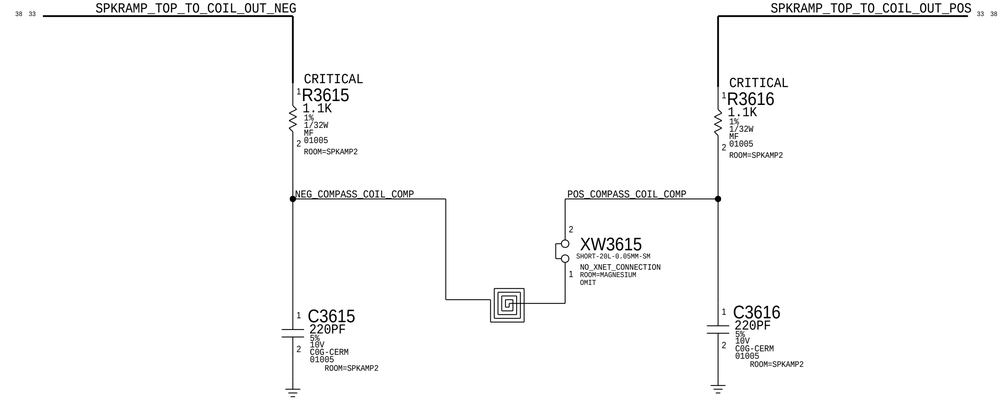

Phosphorus

APN:338S00334

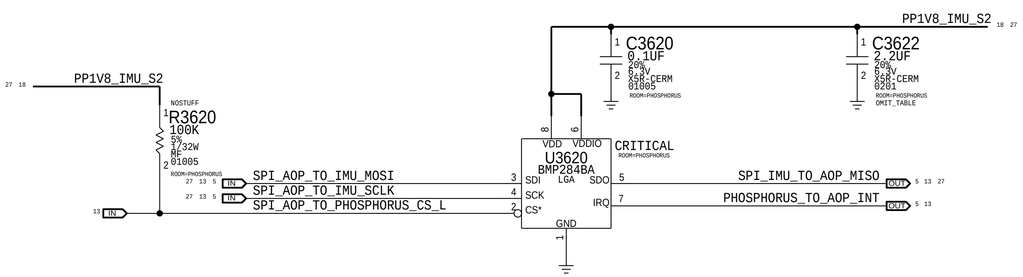

PAGE TITLE	SENSORS
DRAWING NUMBER	051-02159
SIZE	D
REVISION	10.0.0
BRANCH	
PAGE	36 OF 80
SHEET	27 OF 81

Camera PMU

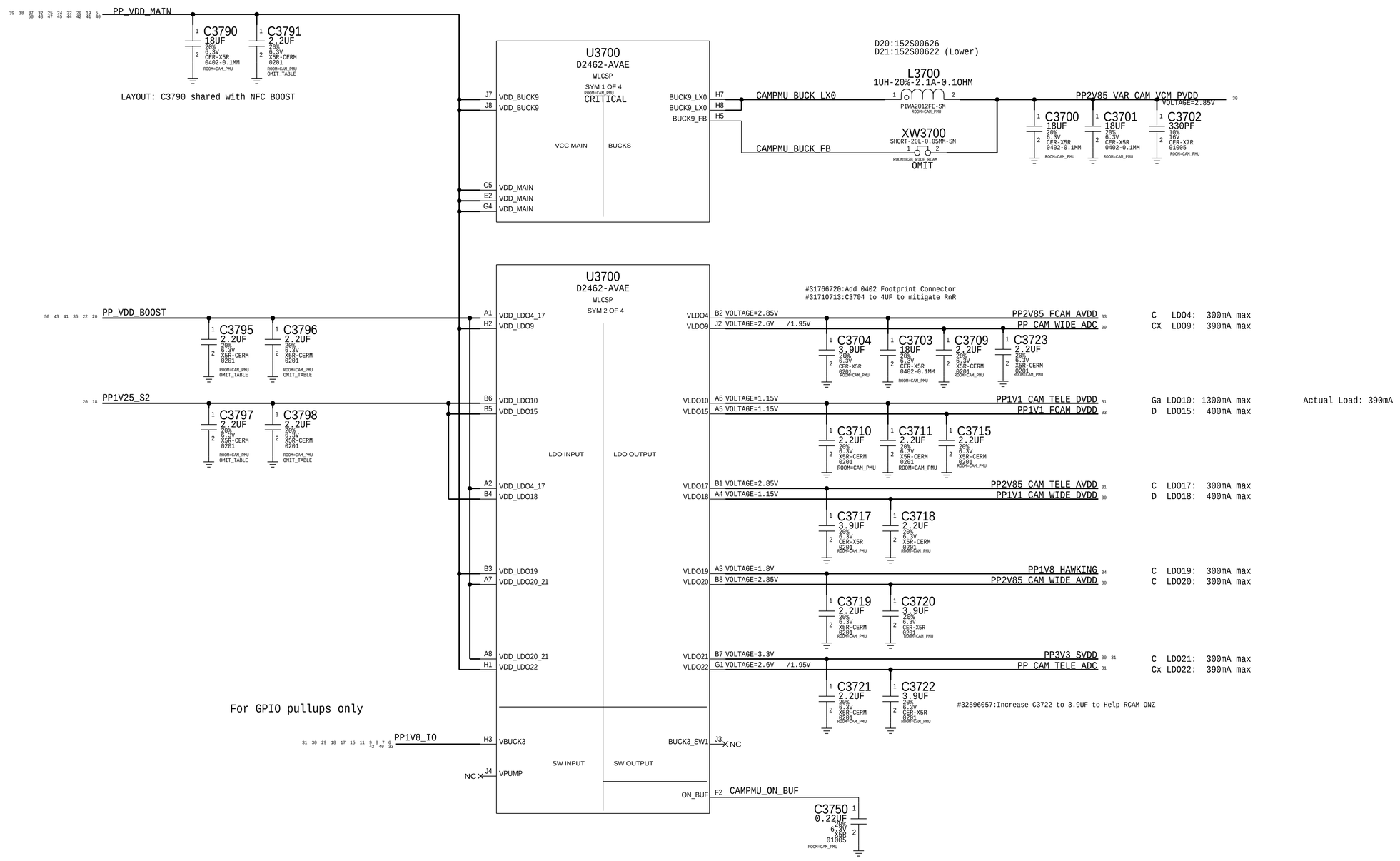

PAGE TITLE	CAMERA: PMU (1/2)
DRAWING NUMBER	051-02159
SIZE	D
REVISION	10.0.0
BRANCH	
PAGE	37 OF 80
SHEET	28 OF 81

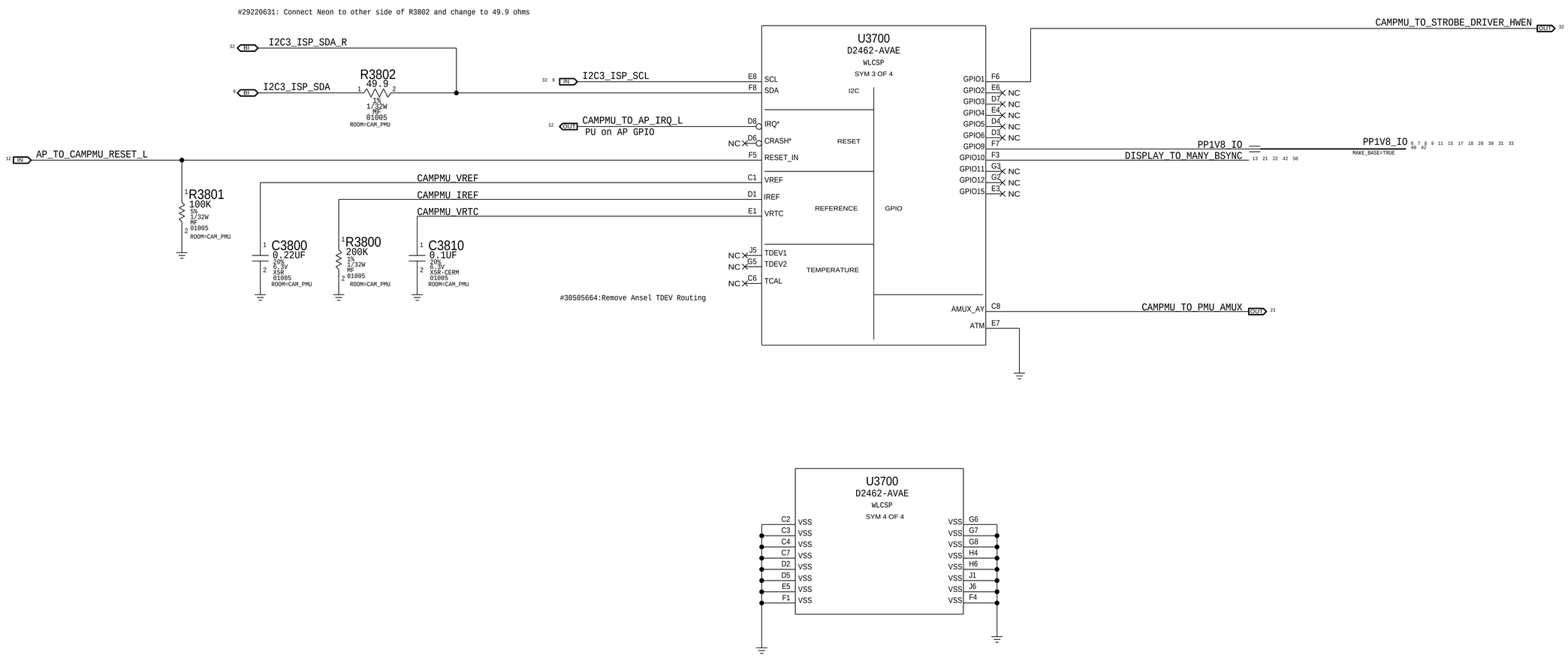

PAGE TITLE	CAMERA: PMU (2/2)
DRAWING NUMBER	051-02159
SIZE	D
REVISION	10.0.0
BRANCH	
PAGE	38 OF 80
SHEET	29 OF 81

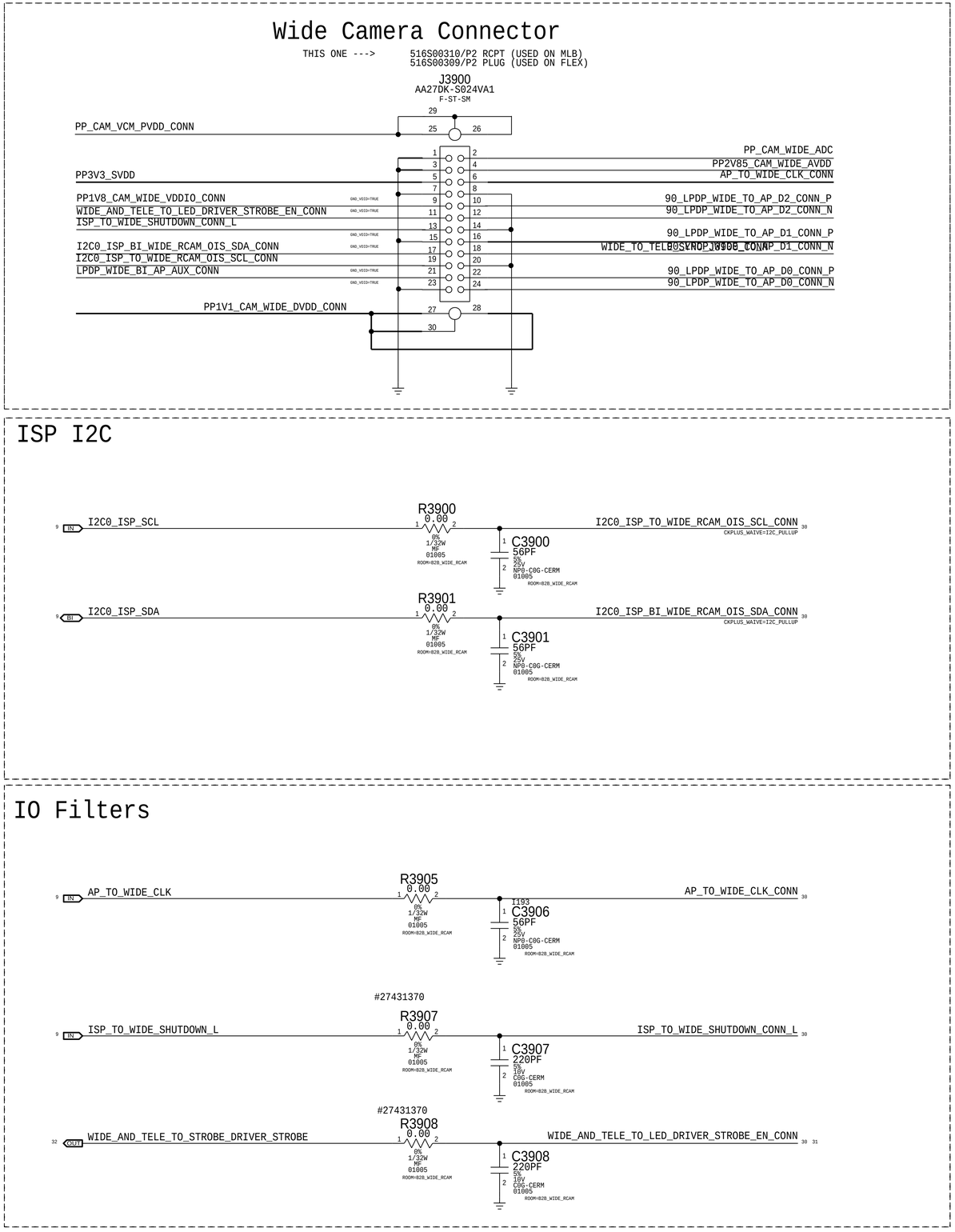

PAGE TITLE	CAMERA: B2B Wide (KY)
DRAWING NUMBER	051-02159
SIZE	D
REVISION	10.0.0
BRANCH	
PAGE	39 OF 80
SHEET	30 OF 81

PAGE TITLE	CAMERA: B2B Tele (TN)
DRAWING NUMBER	051-02159
SIZE	D
REVISION	10.0.0
BRANCH	
PAGE	40 OF 80
SHEET	31 OF 81

LED STROBE DRIVERS (NEON)

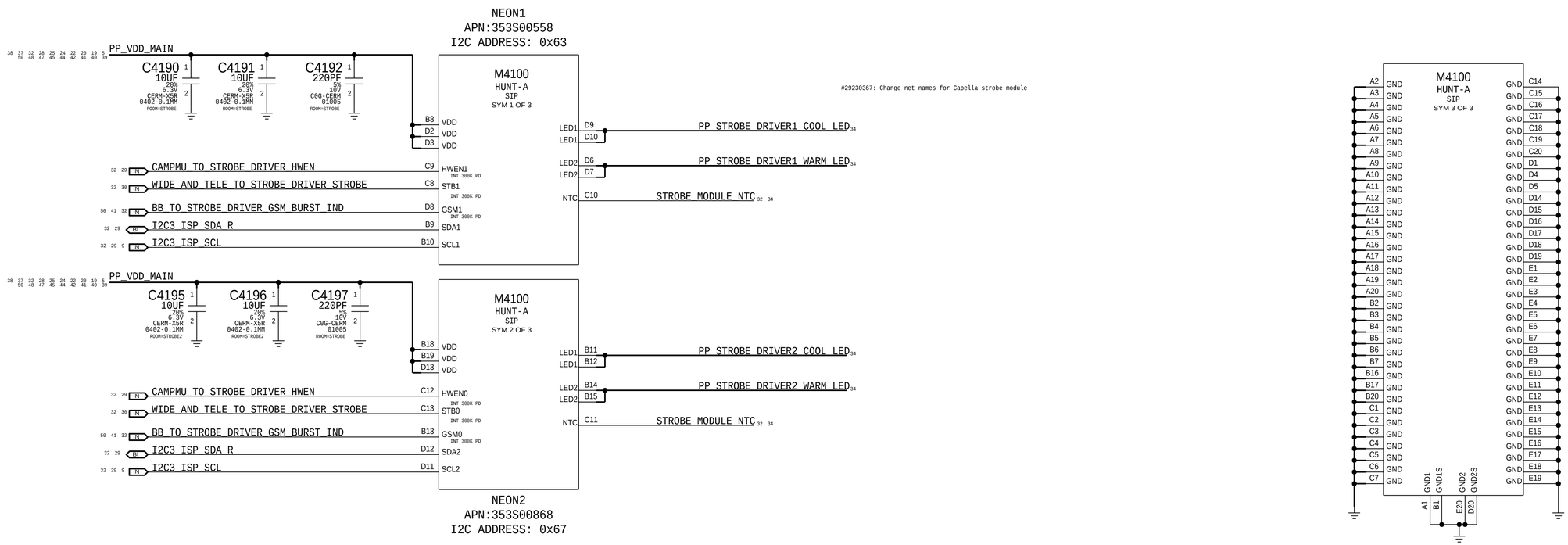

PAGE TITLE	CAMERA: Strobe Drivers
DRAWING NUMBER	051-02159
SIZE	D
REVISION	10.0.0
BRANCH	
PAGE	41 OF 80
SHEET	32 OF 81

FCAM POWER

FL4200
1500OHM-25%-200MA-0.7DCR
01005
ROOM=B2B_FOREHEAD

PP1V8_IO → PP1V8_FCAM_IO_CONN

C4200 0.1UF 20% 6.3V X5R-CERM 01005 ROOM=B2B_FOREHEAD
C4201 220PF 5% 10V C0G-CERM 01005 ROOM=B2B_FOREHEAD

FL4210
33-OHM-25%-1500MA
0201
ROOM=B2B_FOREHEAD

PP1V1_FCAM_DVDD → PP1V1_FCAM_DVDD_CONN

C4210 0.1UF 20% 6.3V X5R-CERM 01005 ROOM=B2B_FOREHEAD
C4211 220PF 5% 10V C0G-CERM 01005 ROOM=B2B_FOREHEAD

FL4220
10-OHM-750MA
01005-1
ROOM=B2B_FOREHEAD

PP2V85_FCAM_AVDD → PP2V85_FCAM_AVDD_CONN

C4220 0.1UF 20% 6.3V X5R-CERM 01005 ROOM=B2B_FOREHEAD
C4221 220PF 5% 10V C0G-CERM 01005 ROOM=B2B_FOREHEAD

PROX + ALS + CONVOY POWER

FL4250
1500OHM-25%-200MA-0.7DCR
01005
ROOM=B2B_FOREHEAD

PP3V0_CONVOY → PP3V0_CONVOY_CONN

C4250 2.2UF 20% 6.3V X5R-CERM 0201 ROOM=B2B_FOREHEAD OMIT_TABLE
C4251 220PF 5% 10V C0G-CERM 01005 ROOM=B2B_FOREHEAD

FL4260
10-OHM-750MA
01005-1
ROOM=B2B_FOREHEAD

PP3V0_S2 → PP3V0_PROX_ALS_CONN

#28225348: Change FL4260 to low-DCR part

C4261 2.2UF 20% 6.3V X5R-CERM 0201 ROOM=B2B_FOREHEAD OMIT_TABLE
C4262 220PF 5% 10V C0G-CERM 01005 ROOM=B2B_FOREHEAD

FOREHEAD CONNECTOR

APN: 516S00146

ROOM=B2B_FOREHEAD
CRITICAL
J4200
245858036201829
F-ST-SM

PP2V85_FCAM_AVDD_CONN	1–2	90_MIPI_FCAM_TO_AP_DATA0_P
PP1V8_FCAM_IO_CONN	3–4	90_MIPI_FCAM_TO_AP_DATA0_N
ISP_TO_FCAM_SHUTDOWN_CONN_L	5–6	
AP_TO_FCAM_CLK_CONN	7–8	90_MIPI_FCAM_TO_AP_CLK_P
COIL_TO_SPKRAMP_TOP_VSENSE_CONN_P	9–10	90_MIPI_FCAM_TO_AP_CLK_N
PP3V0_CONVOY_CONN	11–12	
I2C2_AP_TO_CONVOY_SCL_CONN	13–14	90_MIPI_FCAM_TO_AP_DATA1_P
I2C0_AOP_TO_PROX_ALS_SCL_CONN	15–16	90_MIPI_FCAM_TO_AP_DATA1_N
ALS_TO_AOP_INT_CONN_L	17–18	
PDM_CONVOY_TO_SPKRAMP_TOP_DATA_CONN	19–20	PP1V1_FCAM_DVDD_CONN
FRONTMIC3_TO_CODEC_AIN3_CONN_N	21–22	I2C2_ISP_TO_FCAM_SCL_CONN
PP3V0_PROX_ALS_CONN	23–24	I2C2_ISP_BI_FCAM_SDA_CONN
PDM_SPKRAMP_TOP_TO_CONVOY_CLK_CONN	25–26	SPKRAMP_TOP_TO_COIL_OUT_POS
PP_CODEC_TO_FRONTMIC3_BIAS_CONN	27–28	SPKRAMP_TOP_TO_COIL_OUT_NEG
	29–30	COIL_TO_SPKRAMP_TOP_VSENSE_CONN_N
	31–32	I2C2_AP_BI_CONVOY_SDA_CONN
	33–34	PROX_BI_AOP_INT_PWM_CONN_L
FRONTMIC3_TO_CODEC_AIN3_CONN_P	35–36	I2C0_AOP_BI_PROX_ALS_SDA_CONN
FRONTMIC3_TO_CODEC_BIAS_FILT_RET	39–40	
	42	

DNP
XW4200
ROOM=B2B_FOREHEAD
SHORT-20L-0.05MM-SM

FCAM I/O

#29487888
R4230 0.00 0% 1/32W MF 01005 ROOM=B2B_FOREHEAD
AP_TO_FCAM_CLK → AP_TO_FCAM_CLK_CONN
C4230 56PF 5% 25V NP0-C0G-CERM 01005 ROOM=B2B_FOREHEAD

#27431370
R4232 0.00 0% 1/32W MF 01005 ROOM=B2B_FOREHEAD
ISP_TO_FCAM_SHUTDOWN_L → ISP_TO_FCAM_SHUTDOWN_CONN_L
C4232 220PF 5% 10V C0G-CERM 01005 ROOM=B2B_FOREHEAD

R4234 0.00 0% 1/32W MF 01005 ROOM=B2B_FOREHEAD
I2C2_ISP_SCL → I2C2_ISP_TO_FCAM_SCL_CONN
CKPLUS_WAIVE=I2C_PULLUP
C4234 56PF 5% 25V NP0-C0G-CERM 01005 ROOM=B2B_FOREHEAD

R4236 0.00 0% 1/32W MF 01005 ROOM=B2B_FOREHEAD
I2C2_ISP_SDA → I2C2_ISP_BI_FCAM_SDA_CONN
CKPLUS_WAIVE=I2C_PULLUP
C4236 56PF 5% 25V NP0-C0G-CERM 01005 ROOM=B2B_FOREHEAD

NORTH SPEAKER

SPKRAMP_TOP_TO_COIL_OUT_POS
SPKRAMP_TOP_TO_COIL_OUT_NEG

C4284 220PF 5% 10V C0G-CERM 01005 ROOM=B2B_FOREHEAD
C4285 220PF 5% 10V C0G-CERM 01005 ROOM=B2B_FOREHEAD
C4286 220PF 5% 10V C0G-CERM 01005 ROOM=B2B_FOREHEAD

R4287 100 5% 1/32W MF 01005 ROOM=B2B_FOREHEAD
COIL_TO_SPKRAMP_TOP_VSENSE_P → COIL_TO_SPKRAMP_TOP_VSENSE_CONN_P

C4287 100PF 5% 16V NP0-C0G 01005 ROOM=B2B_FOREHEAD
R4287/R4288 to 100ohm to reduce Xtalk
#30299013:Stuff 100pF at C4287/C4288

R4288 100 5% 1/32W MF 01005 ROOM=B2B_FOREHEAD
COIL_TO_SPKRAMP_TOP_VSENSE_N → COIL_TO_SPKRAMP_TOP_VSENSE_CONN_N

C4288 100PF 5% 16V NP0-C0G 01005 ROOM=B2B_FOREHEAD

PROX + ALS I/O

FL4274
1500OHM-25%-200MA-0.7DCR
01005
ROOM=B2B_FOREHEAD

PROX_BI_AOP_INT_L_PWM → PROX_BI_AOP_INT_PWM_CONN_L

C4274 18PF 5% 16V CERM 01005 ROOM=B2B_FOREHEAD
#30299013:Change C4274 to 18pF to reduce FCAM coupling

R4275 0.00 0% 1/32W MF 01005 ROOM=B2B_FOREHEAD
ALS_TO_AOP_INT_L → ALS_TO_AOP_INT_CONN_L

C4275 56PF 5% 25V NP0-C0G-CERM 01005 ROOM=B2B_FOREHEAD

R4240 0.00 0% 1/32W MF 01005 ROOM=B2B_FOREHEAD
I2C0_AOP_SCL → I2C0_AOP_TO_PROX_ALS_SCL_CONN
CKPLUS_WAIVE=I2C_PULLUP

C4240 56PF 5% 25V NP0-C0G-CERM 01005 ROOM=B2B_FOREHEAD

R4242 0.00 0% 1/32W MF 01005 ROOM=B2B_FOREHEAD
I2C0_AOP_SDA → I2C0_AOP_BI_PROX_ALS_SDA_CONN
CKPLUS_WAIVE=I2C_PULLUP

C4242 56PF 5% 25V NP0-C0G-CERM 01005 ROOM=B2B_FOREHEAD

CONVOY I/O

R4270 100 5% 1/32W MF 01005 ROOM=B2B_FOREHEAD
PDM_SPKRAMP_TOP_TO_CONVOY_CLK → PDM_SPKRAMP_TOP_TO_CONVOY_CLK_CONN

C4270 56PF 5% 25V NP0-C0G-CERM 01005 ROOM=B2B_FOREHEAD

FL4271
1500OHM-25%-200MA-0.7DCR
01005
ROOM=B2B_FOREHEAD

PDM_CONVOY_TO_SPKRAMP_TOP_DATA → PDM_CONVOY_TO_SPKRAMP_TOP_DATA_CONN

C4271 56PF 5% 25V NP0-C0G-CERM 01005 ROOM=B2B_FOREHEAD

R4272 0.00 0% 1/32W MF 01005 ROOM=B2B_FOREHEAD
I2C2_AP_SCL → I2C2_AP_TO_CONVOY_SCL_CONN

C4272 56PF 5% 25V NP0-C0G-CERM 01005 ROOM=B2B_FOREHEAD

R4273 0.00 0% 1/32W MF 01005 ROOM=B2B_FOREHEAD
I2C2_AP_SDA → I2C2_AP_BI_CONVOY_SDA_CONN

C4273 56PF 5% 25V NP0-C0G-CERM 01005 ROOM=B2B_FOREHEAD

MIC3

FL4280
1500OHM-25%-200MA-0.7DCR
01005
ROOM=B2B_FOREHEAD

PP_CODEC_TO_FRONTMIC3_BIAS → PP_CODEC_TO_FRONTMIC3_BIAS_CONN

DZ4280 6.8V-100PF 01005 ROOM=B2B_FOREHEAD

FL4281
1500OHM-25%-200MA-0.7DCR
01005
ROOM=B2B_FOREHEAD

FRONTMIC3_TO_CODEC_AIN3_N → FRONTMIC3_TO_CODEC_AIN3_CONN_N

NO_XNET_CONNECTION=1
DZ4281 6.8V-100PF 01005 ROOM=B2B_FOREHEAD

FL4282
1500OHM-25%-200MA-0.7DCR
01005
ROOM=B2B_FOREHEAD

FRONTMIC3_TO_CODEC_AIN3_P → FRONTMIC3_TO_CODEC_AIN3_CONN_P

NO_XNET_CONNECTION=1
DZ4282 6.8V-100PF 01005 ROOM=B2B_FOREHEAD

PAGE TITLE	CAMERA: FCAM + FOREHEAD
DRAWING NUMBER	051-02159
SIZE	D
REVISION	10.0.0
BRANCH	
PAGE	42 OF 80
SHEET	33 OF 81

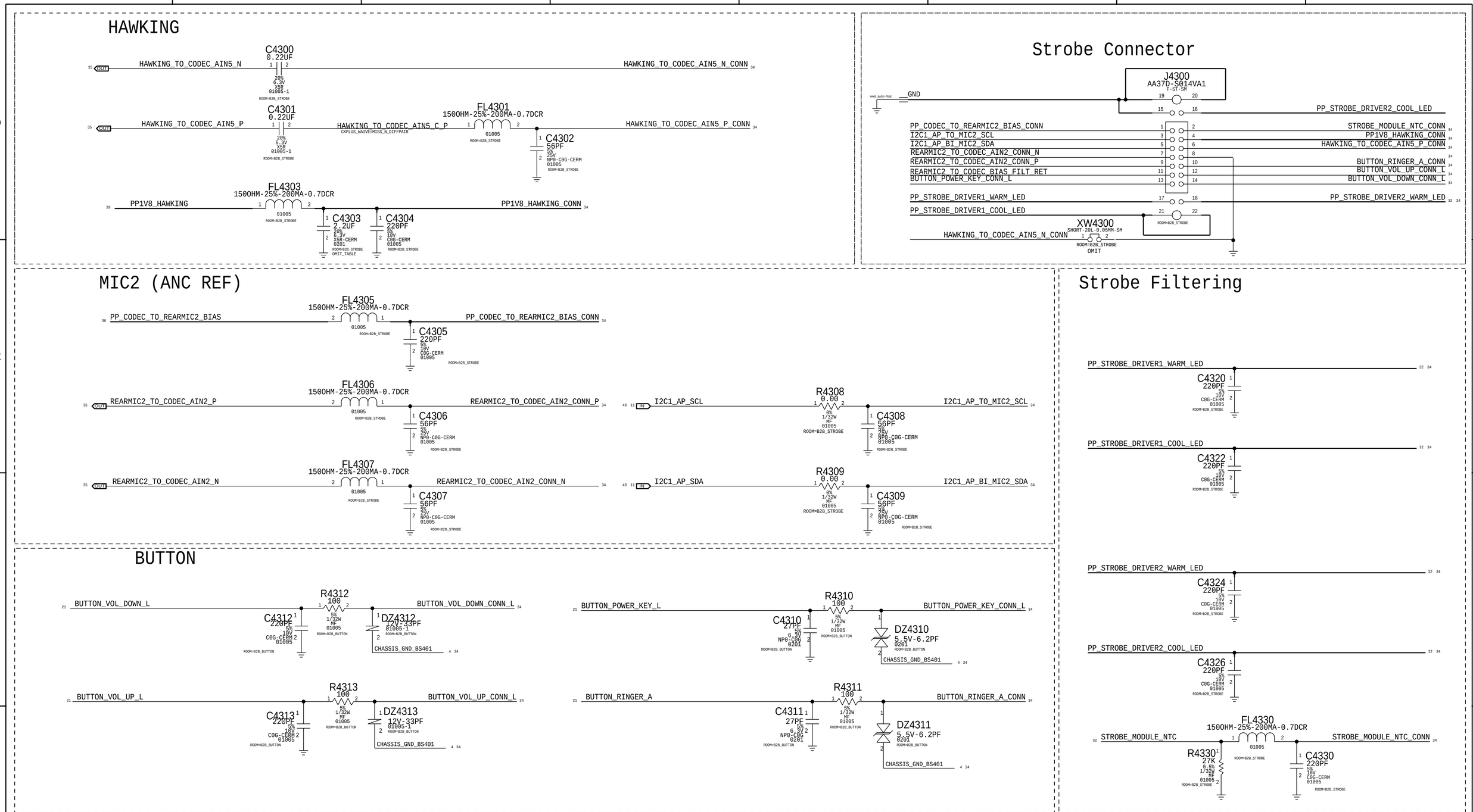

PAGE TITLE	CAMERA: B2B Strobe + Buttons
DRAWING NUMBER	051-02159
SIZE	D
REVISION	10.0.0
BRANCH	
PAGE	43 OF 80
SHEET	34 OF 81

CALLAN AUDIO CODEC (ANALOG INPUTS & OUTPUTS)

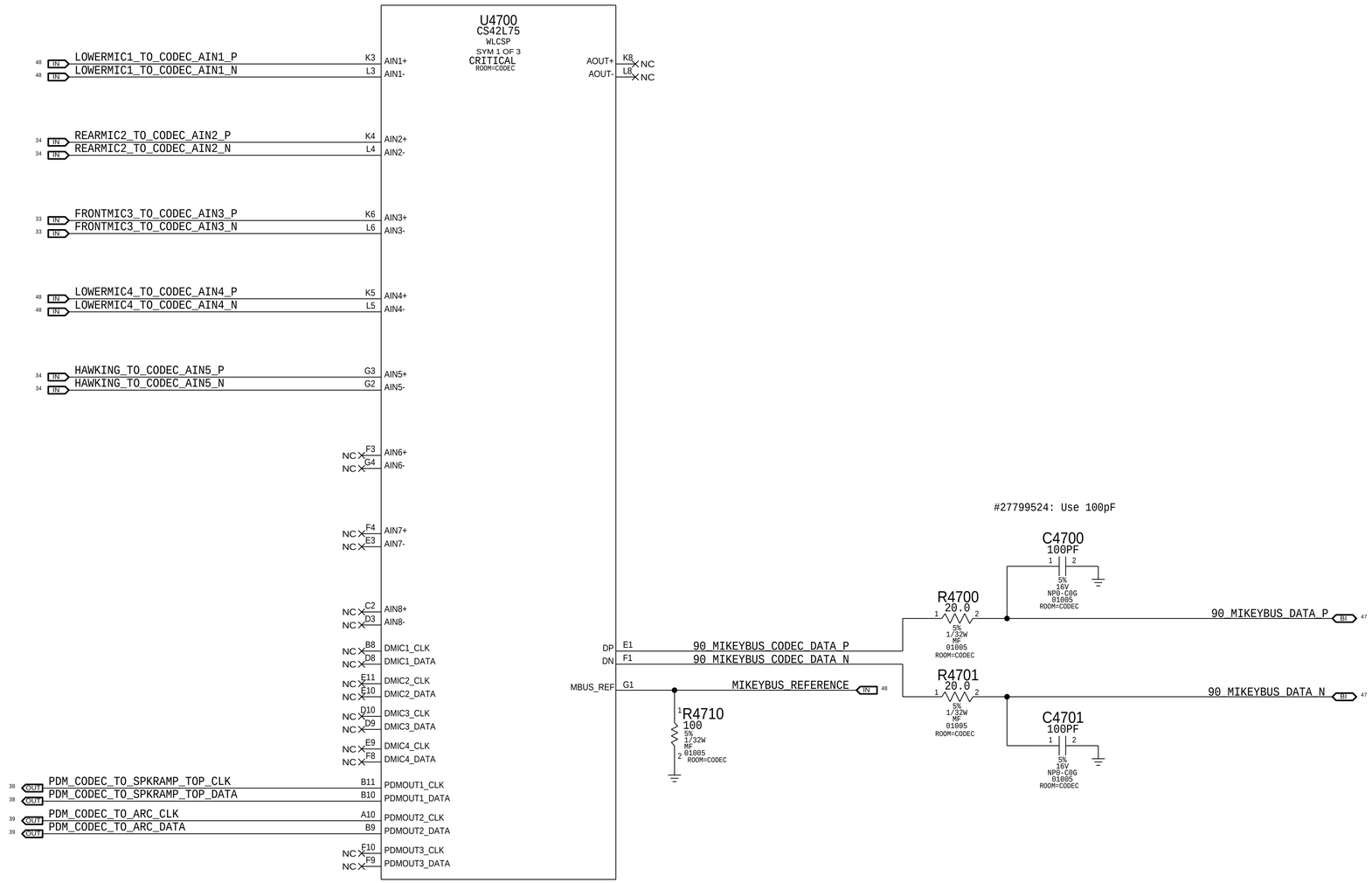

PAGE TITLE	AUDIO: CODEC (1/2)
DRAWING NUMBER	051-02159
SIZE	D
REVISION	10.0.0
BRANCH	
PAGE	47 OF 80
SHEET	35 OF 81

CALLAN AUDIO CODEC (POWER & I/O)

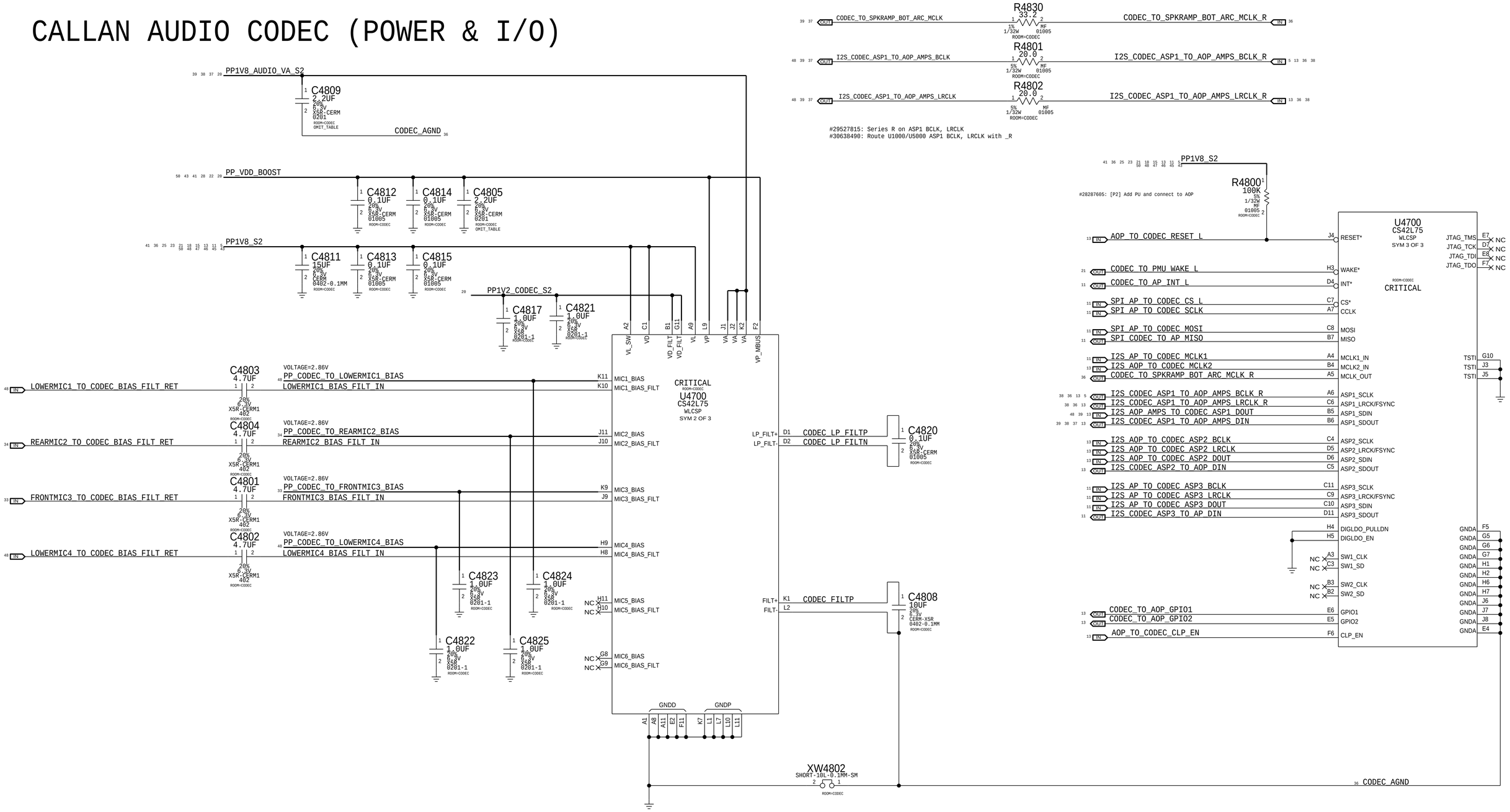

PAGE TITLE	AUDIO: CODEC (2/2)
DRAWING NUMBER	051-02159
SIZE	D
REVISION	10.0.0
BRANCH	
PAGE	48 OF 80
SHEET	36 OF 81

South Speaker Amplifier

APN: 338S00143

I2C ADDRESS: 1000 000x
0x80

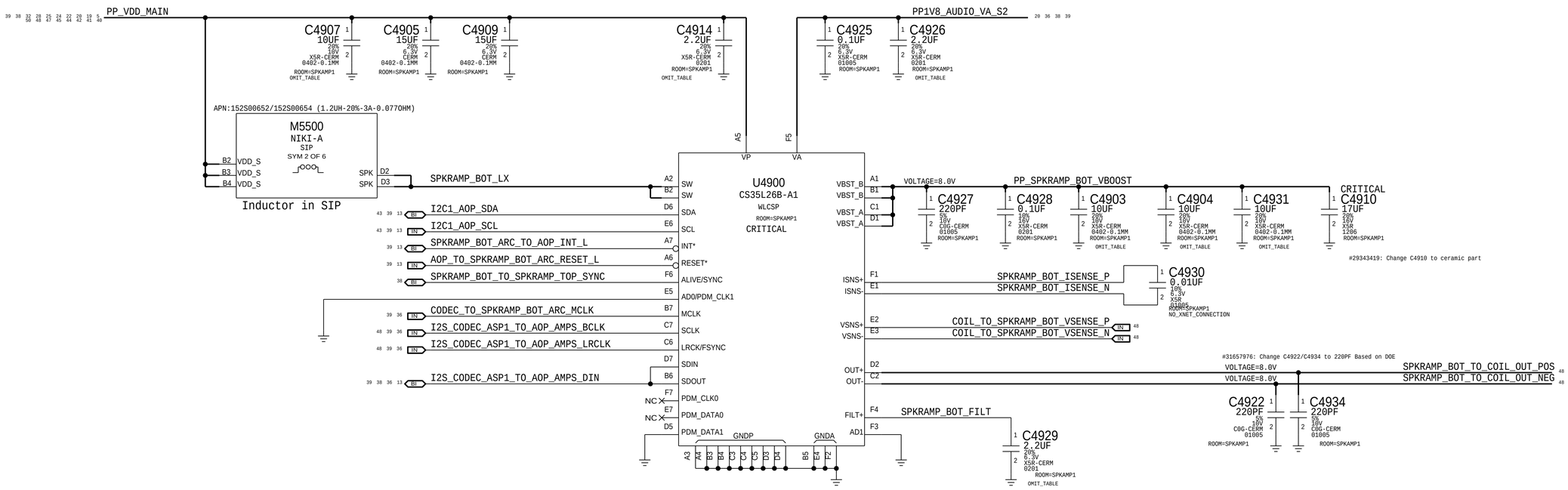

PAGE TITLE	AUDIO: Speaker Amp Bottom
DRAWING NUMBER	051-02159
SIZE	D
REVISION	10.0.0
BRANCH	
PAGE	49 OF 80
SHEET	37 OF 81

North Speaker Amplifier

APN: 338S00295

I2C ADDRESS: 1000 000x (0x80)

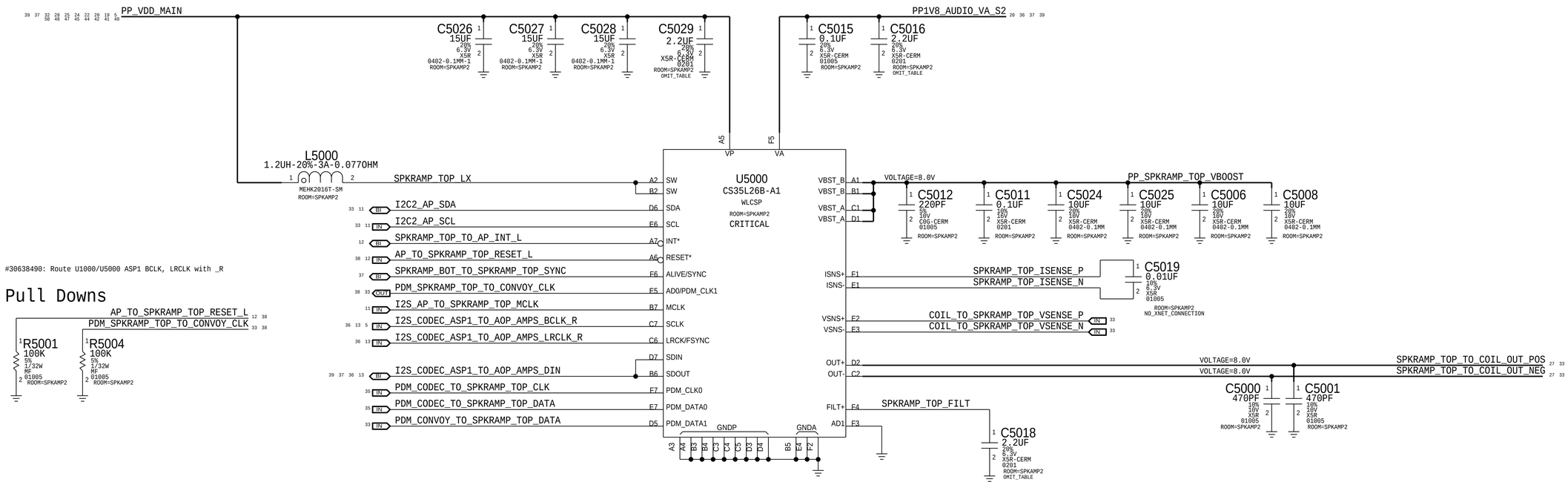

#30638490: Route U1000/U5000 ASP1 BCLK, LRCLK with _R

Pull Downs

PAGE TITLE	AUDIO: Speaker Amp Top
DRAWING NUMBER	051-02159
SIZE	D
REVISION	10.0.0
BRANCH	
PAGE	50 OF 80
SHEET	38 OF 81

ARC DRIVER

APN: 338S00295
I2C ADDRESS: 1000 001x (0x82)

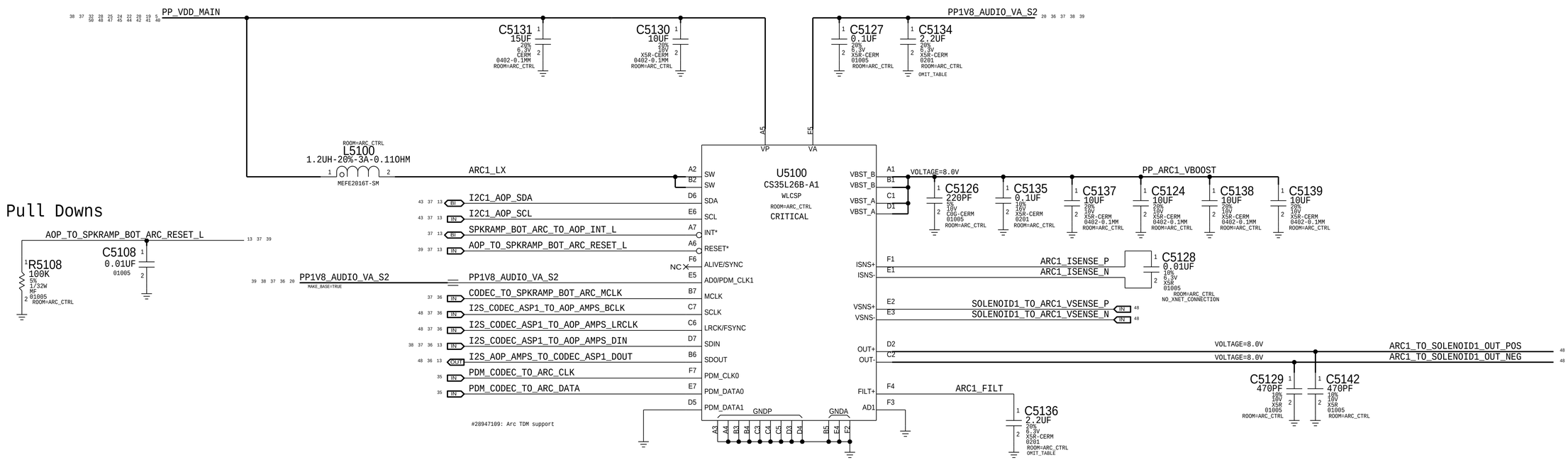

PAGE TITLE	ARC: Driver
DRAWING NUMBER	051-02159
SIZE	D
REVISION	10.0.0
BRANCH	
PAGE	51 OF 80
SHEET	39 OF 81

Niki SIP

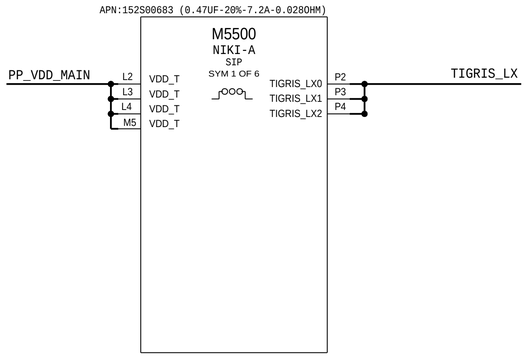

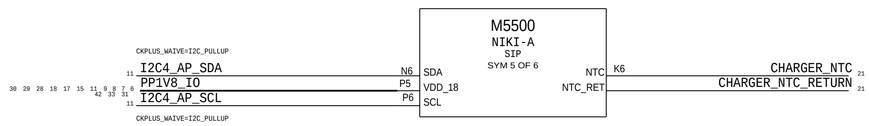

Note: inductors in SIP used for bottom speaker amplifier and backlight
See pages 49, and 56

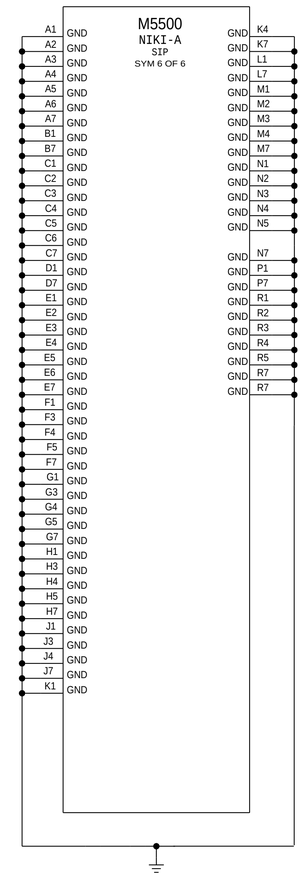

PAGE TITLE	CG: Niki
DRAWING NUMBER	051-02159
SIZE	D
REVISION	10.0.0
BRANCH	
PAGE	55 OF 80
SHEET	40 OF 81

CHESTNUT DISPLAY PMU

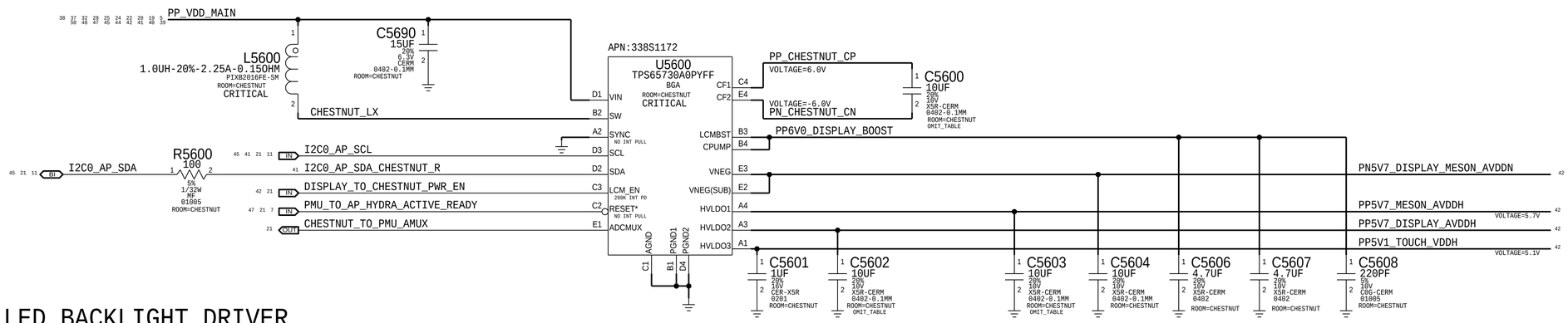

#28282573: Update C5606/C5607 to match D1x

LED BACKLIGHT DRIVER

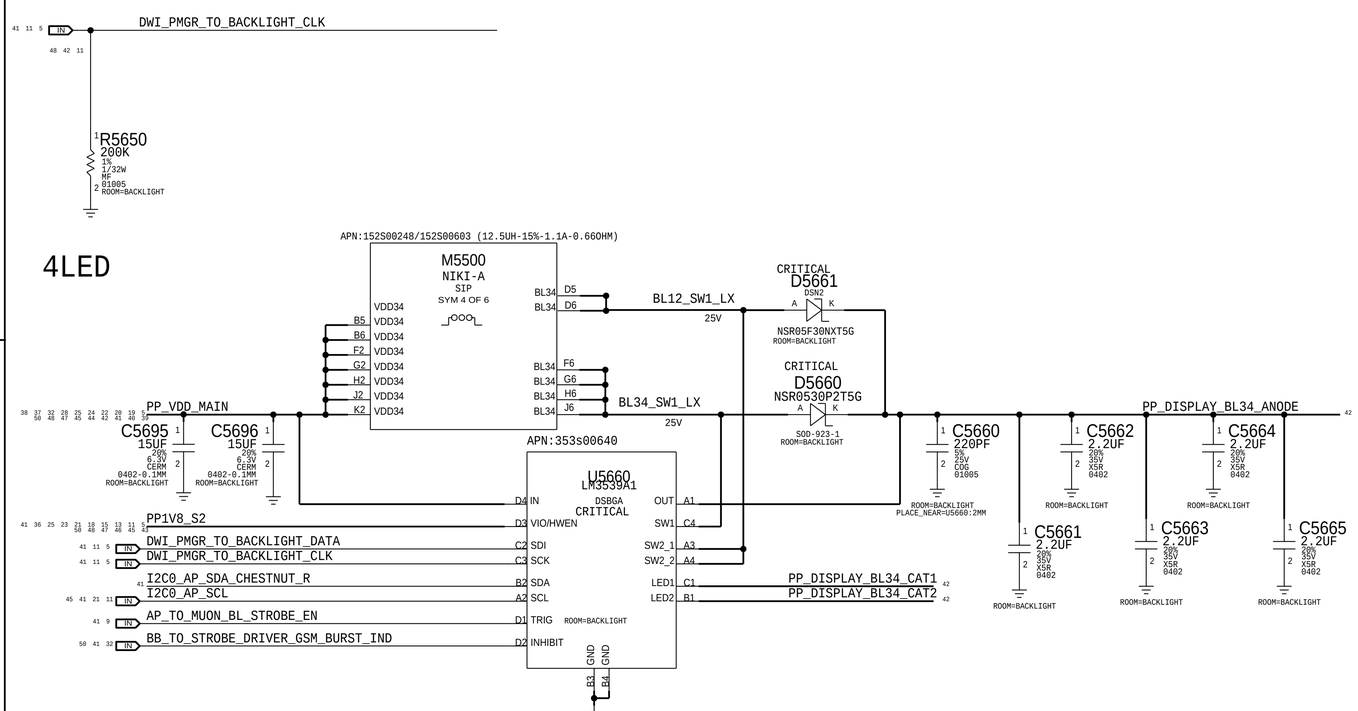

MOJAVE MESA BOOST

APN:353S00671

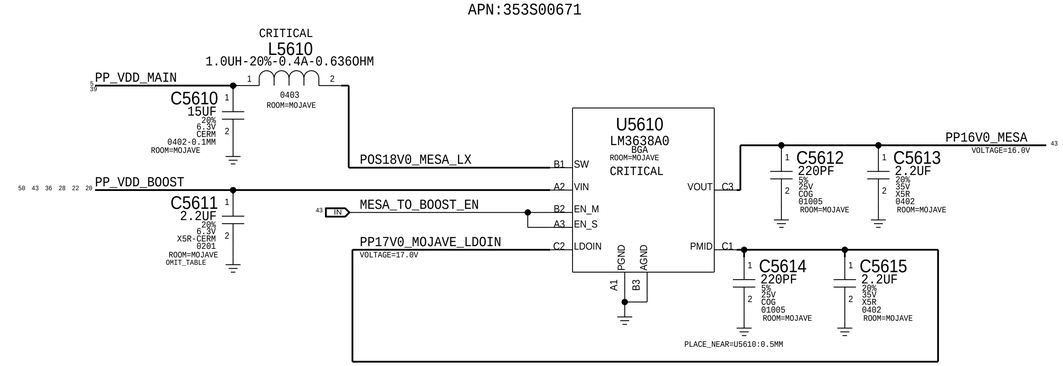

PAGE TITLE	CG: PMUs
DRAWING NUMBER	051-02159
SIZE	D
REVISION	10.0.0
BRANCH	
PAGE	56 OF 80
SHEET	41 OF 81

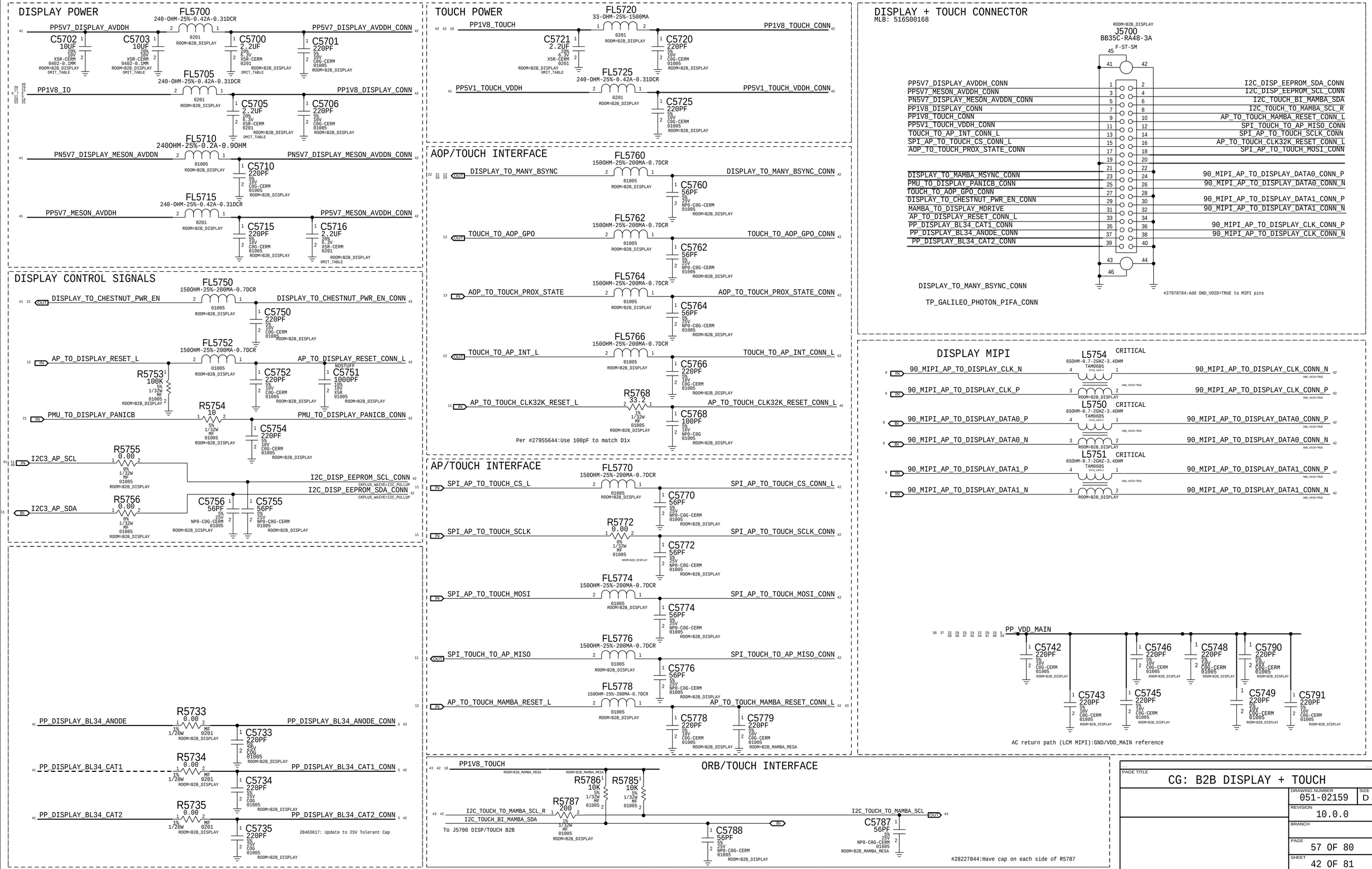

PAGE TITLE
CG: B2B DISPLAY + TOUCH

DRAWING NUMBER	051-02159
SIZE	D
REVISION	10.0.0
BRANCH	
PAGE	57 OF 80
SHEET	42 OF 81

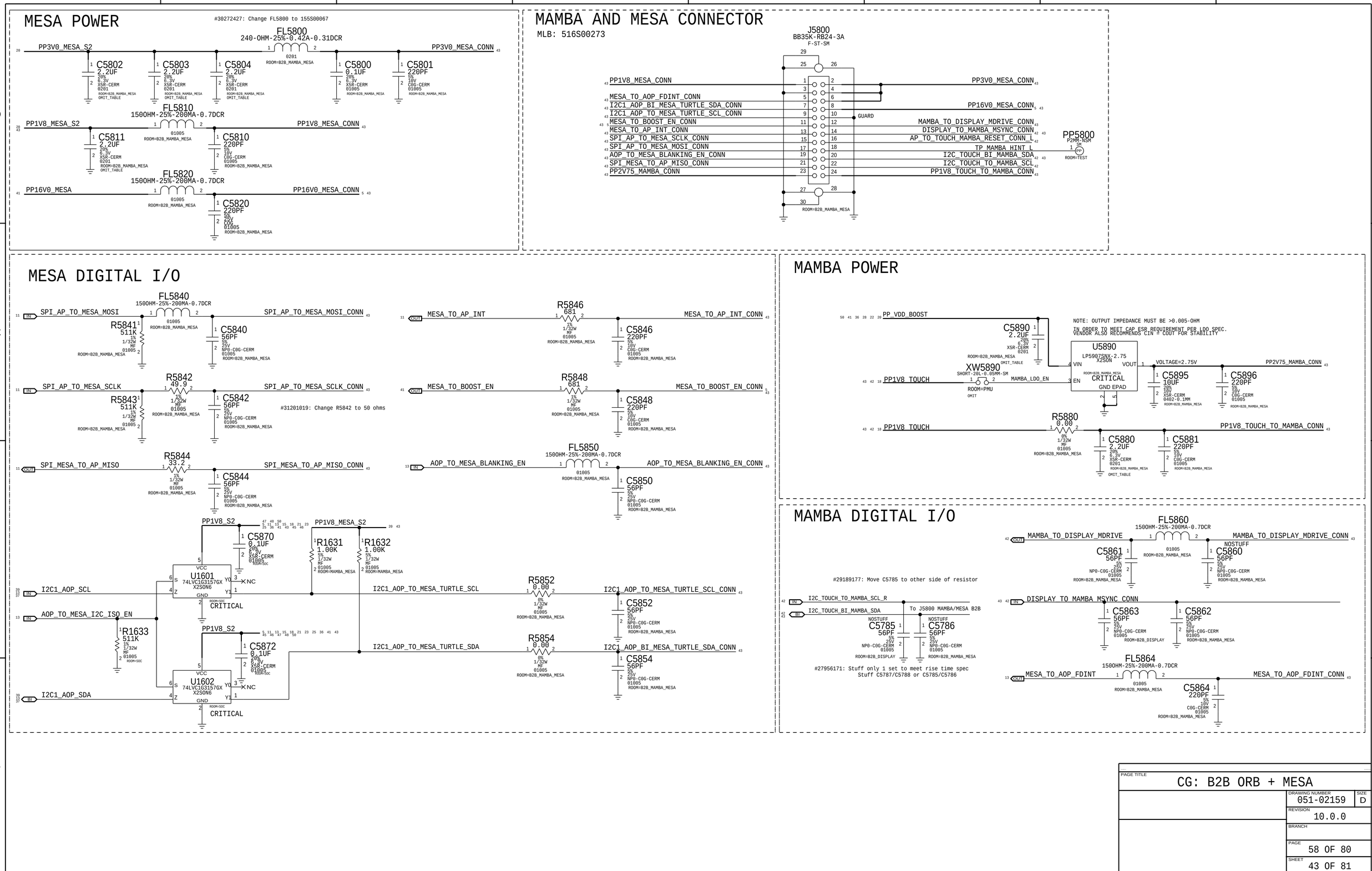

PAGE TITLE	CG: B2B ORB + MESA
DRAWING NUMBER	051-02159
SIZE	D
REVISION	10.0.0
BRANCH	
PAGE	58 OF 80
SHEET	43 OF 81

VDD_MAIN OV CUT-OFF CIRCUIT

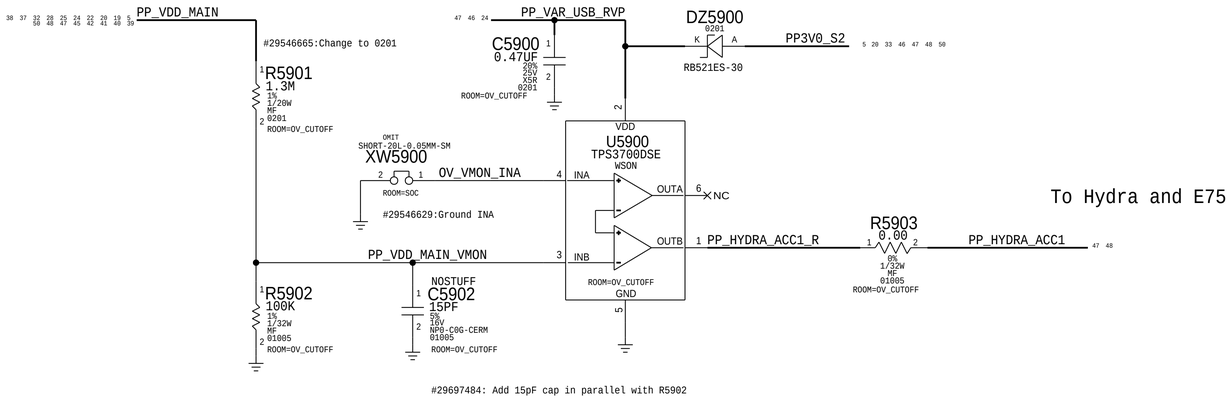

PAGE TITLE
I/O: Overvoltage Cut-Off Circuit

DRAWING NUMBER 051-02159 SIZE D

REVISION 10.0.0

BRANCH

PAGE 59 OF 80

SHEET 44 OF 81

ACCESSORY BUCK

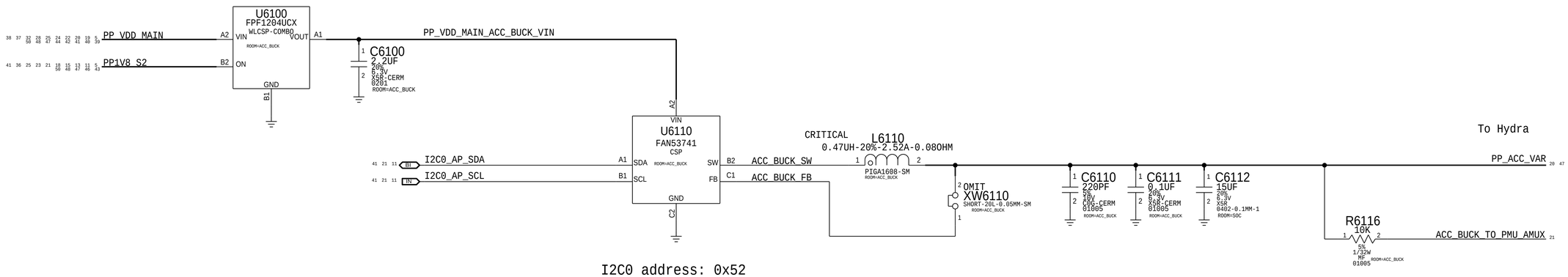

I2C0 address: 0x52

PAGE TITLE	I/O: Accessory Buck
DRAWING NUMBER	051-02159
SIZE	D
REVISION	10.0.0
BRANCH	
PAGE	61 OF 80
SHEET	45 OF 81

USB-PD

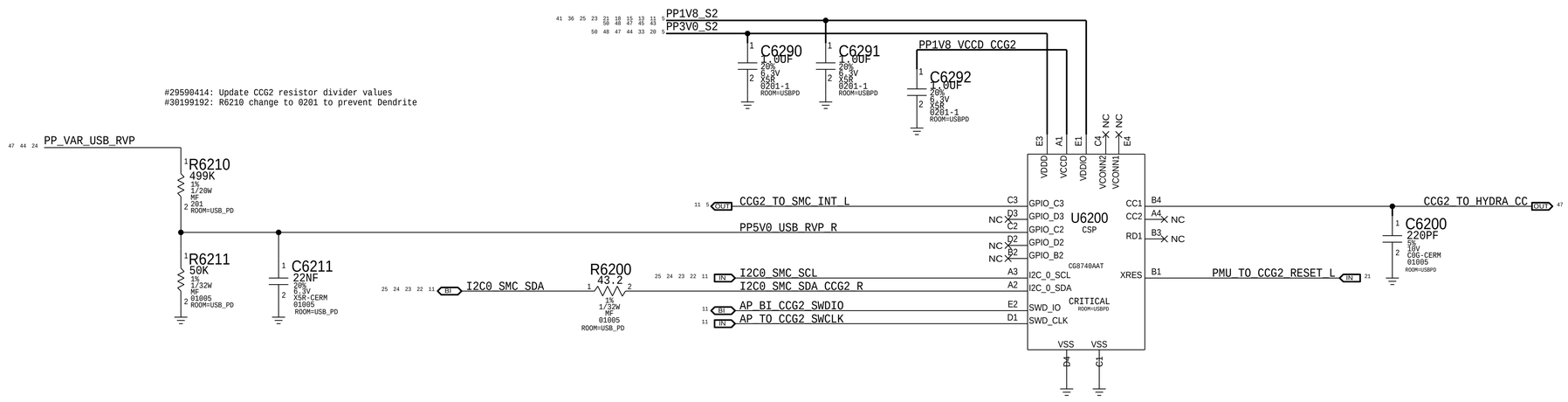

PAGE TITLE	I/O: USB PD
DRAWING NUMBER	051-02159
SIZE	D
REVISION	10.0.0
BRANCH	
PAGE	62 OF 80
SHEET	46 OF 81

HYDRA

12C ADDRESS: 0011010X

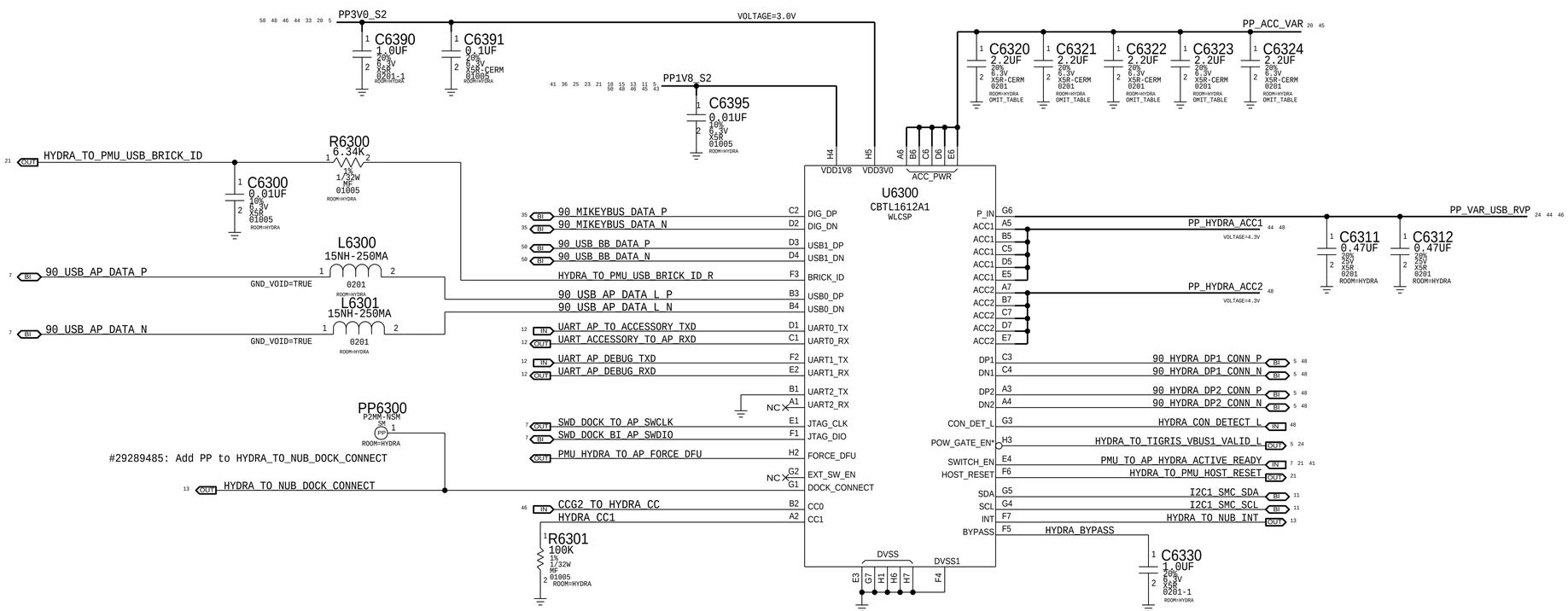

UART TX/RX pin names on Hydra match signal names (i.e. TX pin is input and connects to TX signal)

D20x Stiching AC Cap:

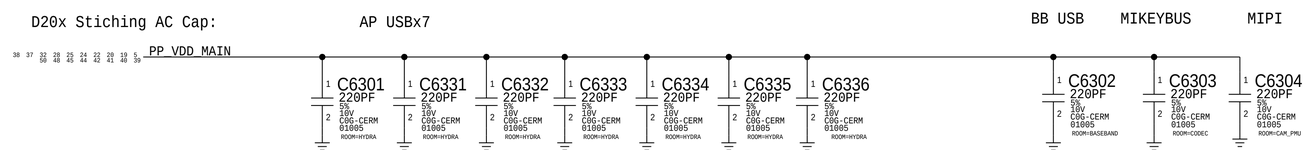

PAGE TITLE	I/O: Hydra
DRAWING NUMBER	051-02159
SIZE	D
REVISION	10.0.0
BRANCH	
PAGE	63 OF 80
SHEET	47 OF 81

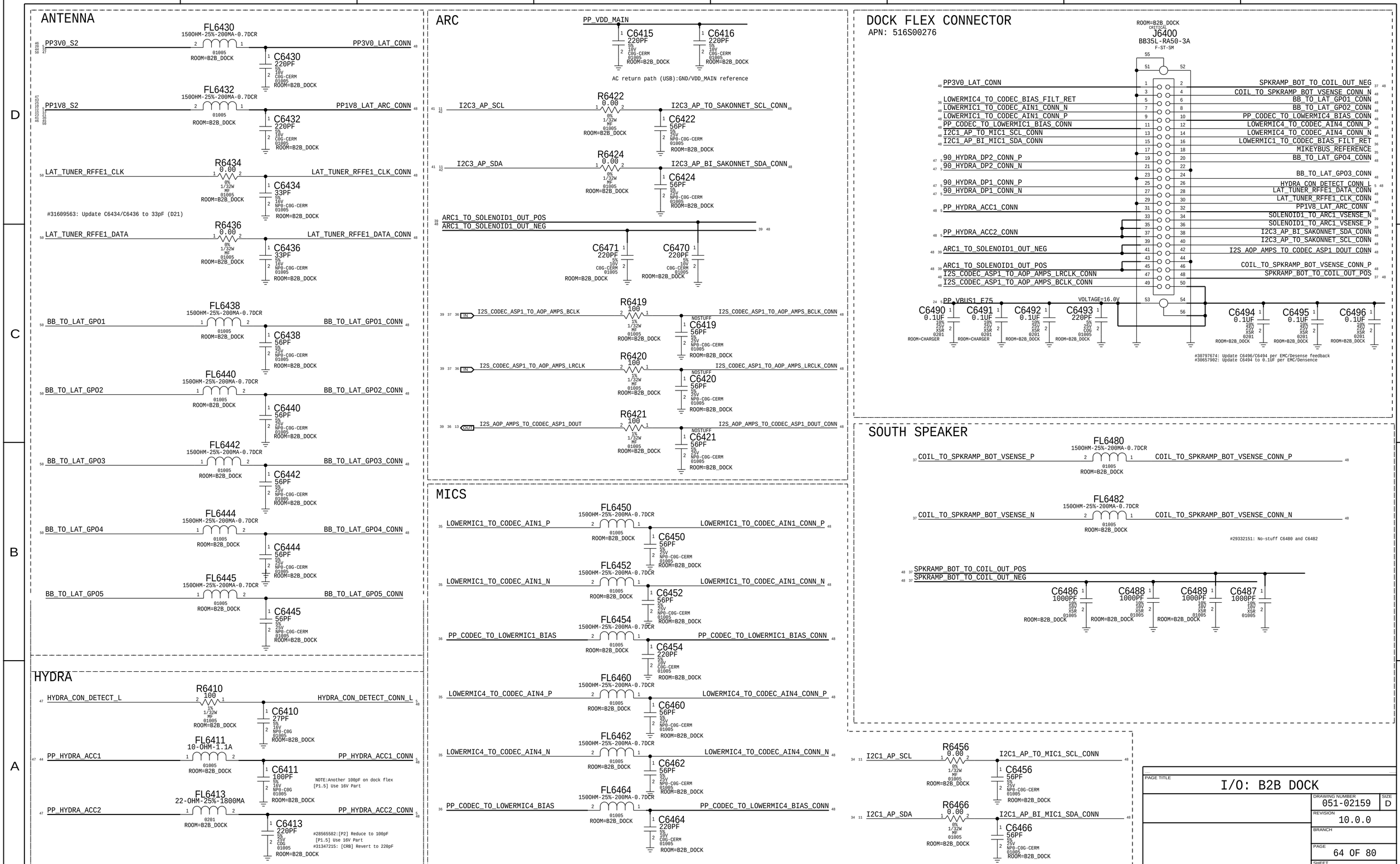
ANTENNA
FL6430 1500HM-25%-200MA-0.7DCR PP3V0_S2 PP3V0_LAT_CONN
C6430 220PF
FL6432 1500HM-25%-200MA-0.7DCR PP1V8_S2 PP1V8_LAT_ARC_CONN
C6432 220PF
R6434 0.00 LAT_TUNER_RFFE1_CLK LAT_TUNER_RFFE1_CLK_CONN
C6434 33PF
#31609563: Update C6434/C6436 to 33pF (D21)
R6436 0.00 LAT_TUNER_RFFE1_DATA LAT_TUNER_RFFE1_DATA_CONN
C6436 33PF
FL6438 1500HM-25%-200MA-0.7DCR BB_TO_LAT_GPO1 BB_TO_LAT_GPO1_CONN
C6438 56PF
FL6440 1500HM-25%-200MA-0.7DCR BB_TO_LAT_GPO2 BB_TO_LAT_GPO2_CONN
C6440 56PF
FL6442 1500HM-25%-200MA-0.7DCR BB_TO_LAT_GPO3 BB_TO_LAT_GPO3_CONN
C6442 56PF
FL6444 1500HM-25%-200MA-0.7DCR BB_TO_LAT_GPO4 BB_TO_LAT_GPO4_CONN
C6444 56PF
FL6445 1500HM-25%-200MA-0.7DCR BB_TO_LAT_GPO5 BB_TO_LAT_GPO5_CONN
C6445 56PF
HYDRA
R6410 100 HYDRA_CON_DETECT_L HYDRA_CON_DETECT_CONN_L
C6410 27PF
FL6411 10-OHM-1.1A PP_HYDRA_ACC1 PP_HYDRA_ACC1_CONN
C6411 100PF
NOTE:Another 100pF on dock flex
[P1.5] Use 16V Part
FL6413 22-OHM-25%-1800MA PP_HYDRA_ACC2 PP_HYDRA_ACC2_CONN
C6413 220PF
#28565582:[P2] Reduce to 100pF
[P1.5] Use 16V Part
#31347215: [CRB] Revert to 220pF
ARC
PP_VDD_MAIN
C6415 220PF C6416 220PF
AC return path (USB):GND/VDD_MAIN reference
R6422 0.00 I2C3_AP_SCL I2C3_AP_TO_SAKONNET_SCL_CONN
C6422 56PF
R6424 0.00 I2C3_AP_SDA I2C3_AP_BI_SAKONNET_SDA_CONN
C6424 56PF
ARC1_TO_SOLENOID1_OUT_POS
ARC1_TO_SOLENOID1_OUT_NEG
C6471 220PF C6470 220PF
R6419 100 I2S_CODEC_ASP1_TO_AOP_AMPS_BCLK I2S_CODEC_ASP1_TO_AOP_AMPS_BCLK_CONN
C6419 56PF
R6420 100 I2S_CODEC_ASP1_TO_AOP_AMPS_LRCLK I2S_CODEC_ASP1_TO_AOP_AMPS_LRCLK_CONN
C6420 56PF
R6421 100 I2S_AOP_AMPS_TO_CODEC_ASP1_DOUT I2S_AOP_AMPS_TO_CODEC_ASP1_DOUT_CONN
C6421 56PF
MICS
FL6450 1500HM-25%-200MA-0.7DCR LOWERMIC1_TO_CODEC_AIN1_P LOWERMIC1_TO_CODEC_AIN1_CONN_P
C6450 56PF
FL6452 1500HM-25%-200MA-0.7DCR LOWERMIC1_TO_CODEC_AIN1_N LOWERMIC1_TO_CODEC_AIN1_CONN_N
C6452 56PF
FL6454 1500HM-25%-200MA-0.7DCR PP_CODEC_TO_LOWERMIC1_BIAS PP_CODEC_TO_LOWERMIC1_BIAS_CONN
C6454 220PF
FL6460 1500HM-25%-200MA-0.7DCR LOWERMIC4_TO_CODEC_AIN4_P LOWERMIC4_TO_CODEC_AIN4_CONN_P
C6460 56PF
FL6462 1500HM-25%-200MA-0.7DCR LOWERMIC4_TO_CODEC_AIN4_N LOWERMIC4_TO_CODEC_AIN4_CONN_N
C6462 56PF
FL6464 1500HM-25%-200MA-0.7DCR PP_CODEC_TO_LOWERMIC4_BIAS PP_CODEC_TO_LOWERMIC4_BIAS_CONN
C6464 220PF
DOCK FLEX CONNECTOR
APN: 516S00276
J6400 BB35L-RA50-3A
PP3V0_LAT_CONN
LOWERMIC4_TO_CODEC_BIAS_FILT_RET
LOWERMIC1_TO_CODEC_AIN1_CONN_N
LOWERMIC1_TO_CODEC_AIN1_CONN_P
PP_CODEC_TO_LOWERMIC1_BIAS_CONN
I2C1_AP_TO_MIC1_SCL_CONN
I2C1_AP_BI_MIC1_SDA_CONN
90_HYDRA_DP2_CONN_P
90_HYDRA_DP2_CONN_N
90_HYDRA_DP1_CONN_P
90_HYDRA_DP1_CONN_N
PP_HYDRA_ACC1_CONN
PP_HYDRA_ACC2_CONN
ARC1_TO_SOLENOID1_OUT_NEG
ARC1_TO_SOLENOID1_OUT_POS
I2S_CODEC_ASP1_TO_AOP_AMPS_LRCLK_CONN
I2S_CODEC_ASP1_TO_AOP_AMPS_BCLK_CONN
PP_VBUS1_F75
VOLTAGE=16.0V
SPKRAMP_BOT_TO_COIL_OUT_NEG
COIL_TO_SPKRAMP_BOT_VSENSE_CONN_N
BB_TO_LAT_GPO1_CONN
BB_TO_LAT_GPO2_CONN
PP_CODEC_TO_LOWERMIC4_BIAS_CONN
LOWERMIC4_TO_CODEC_AIN4_CONN_P
LOWERMIC4_TO_CODEC_AIN4_CONN_N
BB_TO_LAT_GPO3_CONN
HYDRA_CON_DETECT_CONN_L
LAT_TUNER_RFFE1_DATA_CONN
LAT_TUNER_RFFE1_CLK_CONN
PP1V8_LAT_ARC_CONN
SOLENOID1_TO_ARC1_VSENSE_N
SOLENOID1_TO_ARC1_VSENSE_P
I2C3_AP_BI_SAKONNET_SDA_CONN
I2C3_AP_TO_SAKONNET_SCL_CONN
I2S_AOP_AMPS_TO_CODEC_ASP1_DOUT_CONN
COIL_TO_SPKRAMP_BOT_VSENSE_CONN_P
SPKRAMP_BOT_TO_COIL_OUT_POS
C6490 0.1UF C6491 0.1UF C6492 0.1UF C6493 220PF C6494 0.1UF C6495 0.1UF C6496 0.1UF
#30797674: Update C6496/C6494 per EMC/Desense feedback
#30657982: Update C6494 to 0.1UF per EMC/Densence
SOUTH SPEAKER
FL6480 1500HM-25%-200MA-0.7DCR COIL_TO_SPKRAMP_BOT_VSENSE_P COIL_TO_SPKRAMP_BOT_VSENSE_CONN_P
FL6482 1500HM-25%-200MA-0.7DCR COIL_TO_SPKRAMP_BOT_VSENSE_N COIL_TO_SPKRAMP_BOT_VSENSE_CONN_N
#29332151: No-stuff C6480 and C6482
SPKRAMP_BOT_TO_COIL_OUT_POS
SPKRAMP_BOT_TO_COIL_OUT_NEG
C6486 1000PF C6488 1000PF C6489 1000PF C6487 1000PF
R6456 0.00 I2C1_AP_SCL I2C1_AP_TO_MIC1_SCL_CONN
C6456 56PF
R6466 0.00 I2C1_AP_SDA I2C1_AP_BI_MIC1_SDA_CONN
C6466 56PF
PAGE TITLE
I/O: B2B DOCK
DRAWING NUMBER 051-02159
SIZE D
REVISION 10.0.0
BRANCH
PAGE 64 OF 80
SHEET 48 OF 81

I2C MAP

(see #28857723 updates)

Diags ID	Bus	Device	7-Bit Address	8-Bit Address	Device Max Speed	Operating Speed	Net Name
0	AP I2C0	**Agnes** (System PMU)	0x74	0xE8	400 Kbps	400 Kbps	I2C0_AP
		Chestnut (Display PMU)	0x27	0x4E	400 Kbps		
		AccessoryBuck	0x52	0xA4	400 Kbps		
		Muon (Backlight Controller 2)	0x62	0xC4	1 Mbps		
1	AP I2C1	**MIC1 Temp Sensor** (South)	0x54	0xA8	1 Mbps	100 Kbps	I2C1_AP
		MIC2 Temp Sensor (North Rear)	0x56	0xAC	1 Mbps		
2	AP I2C2	**Adare** (Top Speaker Amp)	0x40	0x80	1 Mbps	1 Mbps	I2C2_AP
		Convoy (Top Speaker Cap Sense)	0x21	0x42	1 Mbps		
3	AP I2C3	**EEPROM**	0x51	0xA2	400 Kbps	400 Kbps	I2C3_AP
		Muon (Backlight Controller 1)	0x62	0xC4	400 Kbps		
		Sakonnet (Arc: Hall Effect Sensor)	0x08	0x10	1 Mbps		
		EEPROM	0x50	0xA0	400 Kbps		
	ISP I2C0	**Casper** (Rear Wide Camera)	0x10	0x20	1 Mbps	1 Mbps	I2C0_ISP
		Grunberg+ (AF/OIS Wide Camera)	0x3C	0x78	1 Mbps		
	ISP I2C1	**Billings** (Rear Tele Camera)	0x20	0x40	1 Mbps	1 Mbps	I2C1_ISP
		Edwin (AF Tele Camera)	0x0D	0x1A	1 Mbps		
	ISP I2C2	**Concord** (Front Camera)	0x10	0x20	1 Mbps	400 Kbps	I2C2_ISP
	ISP I2C3	**Neon** (Strobe - CW : LM3566)	0x63	0xC6	1 Mbps	400 Kbps	I2C3_ISP
		Ansel (Camera PMU)	0x40	0x80	1 Mbps		
		Neon (Strobe - AM : LM35662)	0x67	0xCE	1 Mbps		
	SEP I2C	**EEPROM**	0x51	0xA2	400 Kbps	400 Kbps	I2C4_AP
4	AOP I2C0	**Doppler** (Prox Sensor)	0x58	0xB0	1 Mbps	400 Kbps	I2C0_AOP
		CT709 (ALS : Firefish)	0x29	0x52	400 Kbps		
5	AOP I2C1	**Adare** (Bottom Speaker Amp)	0x40	0x80	1 Mbps	1 Mbps	I2C1_AOP
		Adare (Arc : Driver)	0x41	0x82	1 Mbps		
		Apache3 (Mesa Power Supply)	0x61	0xC2	1 Mbps		I2C1_AOP_ISO
		Turtle	0x2C	0x58	1 Mbps		
6	SMC I2C0	**Tigris2** (Charger)	0x71	0xE2	400 Kbps	400 Kbps	I2C0_SMC
		TPS61280 (VDD Boost)	0x75	0xEA	400 Kbps		
		CCG2 (USB PD)	0x12 (0x08)	0x24 (0x10)	1 Mbps		
		Iktara	0x39	0x72	400 Kbps		
		SN45546 (Gas Gauge)	0x55	0xAA	400 Kbps		
7	SMC I2C1	**Hydra**	0x1A	0x34	400 Kbps	400 Kbps	I2C1_SMC

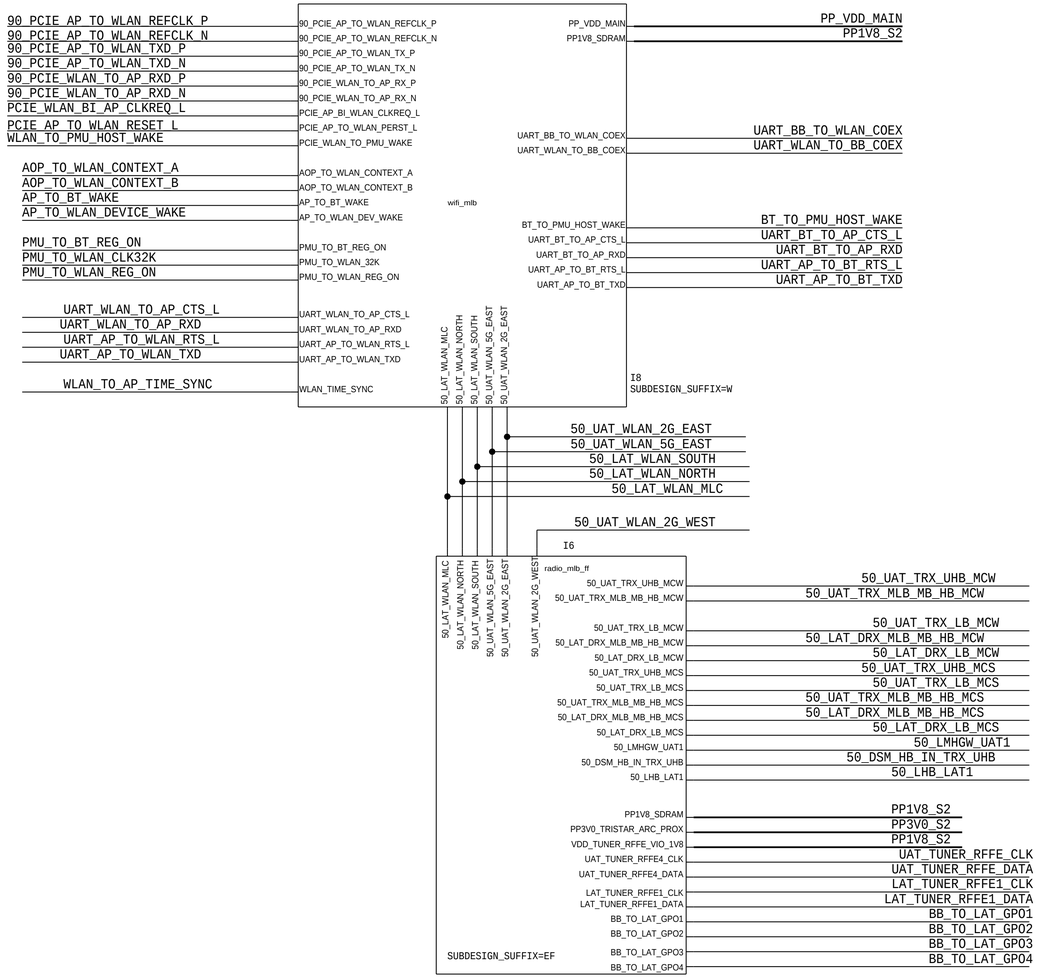

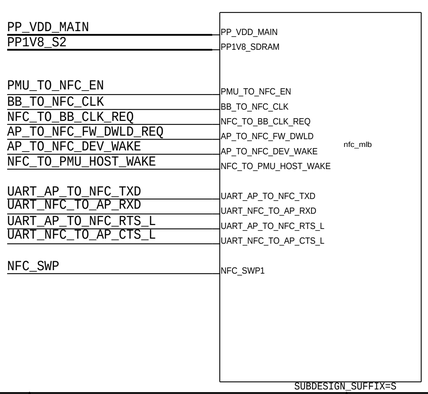

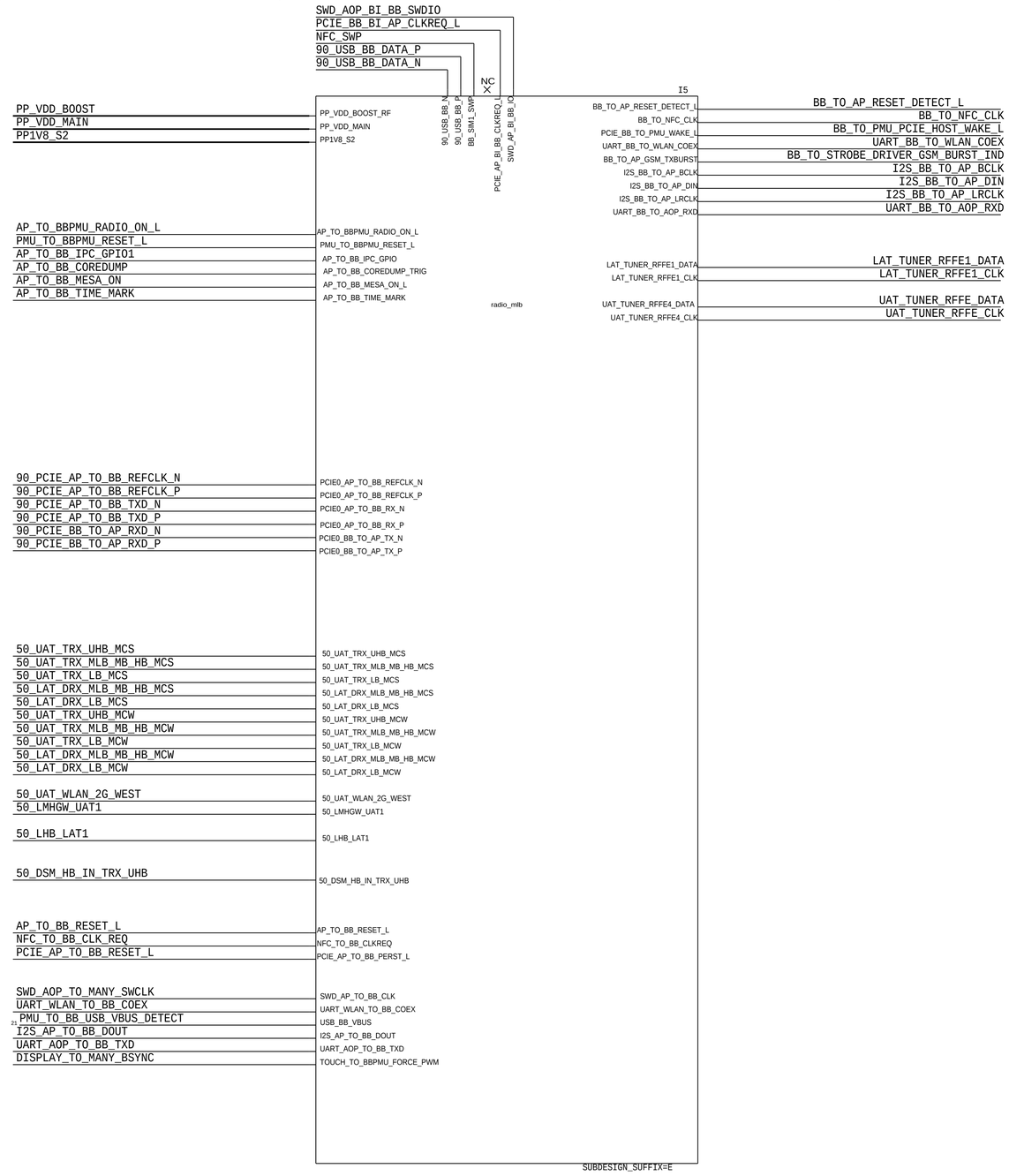

SYNC_MASTER=D21_MLB_D0E SYNC_DATE=07/18/2016

PAGE TITLE

RADIOS

DRAWING NUMBER	051-02159
SIZE	D
REVISION	10.0.0
BRANCH	
PAGE	80 OF 80
SHEET	50 OF 81

1. ALL RESISTANCE VALUES ARE IN OHMS, 0.1 WATT +/- 5%.
2. ALL CAPACITANCE VALUES ARE IN MICROFARADS.
3. ALL CRYSTALS & OSCILLATOR VALUES ARE IN HERTZ.

REV	ECN	DESCRIPTION OF REVISION	CK APPD / DATE
10	0008927012	ENGINEERING RELEASED	2017-06-06

D21X WIFI_MLB (GUINNESS)
NOV 28, 2016

PDF PAGE	CSA PAGE	CONTENTS
2	76	GUINNESS
3	77	WIFI FRONT-END

POWER
80 50 IN PP_VDD_MAIN
80 50 IN PP1V8_S2

CLOCKS
80 50 IN PMU_TO_WLAN_CLK32K
80 50 OUT WLAN_TO_AP_TIME_SYNC

CONTROL
80 50 IN PMU_TO_WLAN_REG_ON
80 50 IN PMU_TO_BT_REG_ON
80 50 OUT BT_TO_PMU_HOST_WAKE
80 50 IN AP_TO_BT_WAKE

WLAN PCIE
80 50 IN 90_PCIE_AP_TO_WLAN_REFCLK_P
80 50 IN 90_PCIE_AP_TO_WLAN_REFCLK_N
80 50 IN 90_PCIE_AP_TO_WLAN_TXD_P
80 50 IN 90_PCIE_AP_TO_WLAN_TXD_N
80 50 OUT 90_PCIE_WLAN_TO_AP_RXD_P
80 50 OUT 90_PCIE_WLAN_TO_AP_RXD_N
80 50 IN PCIE_AP_TO_WLAN_RESET_L
80 50 IO PCIE_WLAN_BI_AP_CLKREQ_L
80 50 OUT WLAN_TO_PMU_HOST_WAKE
80 50 IN AP_TO_WLAN_DEVICE_WAKE

WLAN UART
80 50 OUT UART_WLAN_TO_AP_RXD
80 50 IN UART_AP_TO_WLAN_TXD
80 50 OUT UART_WLAN_TO_AP_CTS_L
80 50 IN UART_AP_TO_WLAN_RTS_L

BLUETOOTH UART
80 50 IN UART_AP_TO_BT_TXD
80 50 OUT UART_BT_TO_AP_RXD
80 50 IN UART_AP_TO_BT_RTS_L
80 50 OUT UART_BT_TO_AP_CTS_L

AOP
80 50 IN AOP_TO_WLAN_CONTEXT_A
80 50 IN AOP_TO_WLAN_CONTEXT_B

COEX
80 50 IN UART_BB_TO_WLAN_COEX
80 50 OUT UART_WLAN_TO_BB_COEX

ANTENNA
81 50 IO 50_UAT_WLAN_2G_EAST
81 50 IO 50_UAT_WLAN_5G_EAST
81 50 IO 50_LAT_WLAN_NORTH
81 50 IO 50_LAT_WLAN_SOUTH
81 50 IO 50_LAT_WLAN_MLC

SymbolPorts

DRAWING TITLE		
SCH,MLB,D21		
	DRAWING NUMBER 051-02159	SIZE D
	REVISION 10.0.0	
	BRANCH	
	PAGE 1 OF 5	
	SHEET 79 OF 81	

CONFIDENTIAL AND PROPRIETARY APPLE SYSTEM DESIGN. FOR REFERENCE PURPOSE ONLY - NOT A CHANGE REQUEST

WIFI/BT

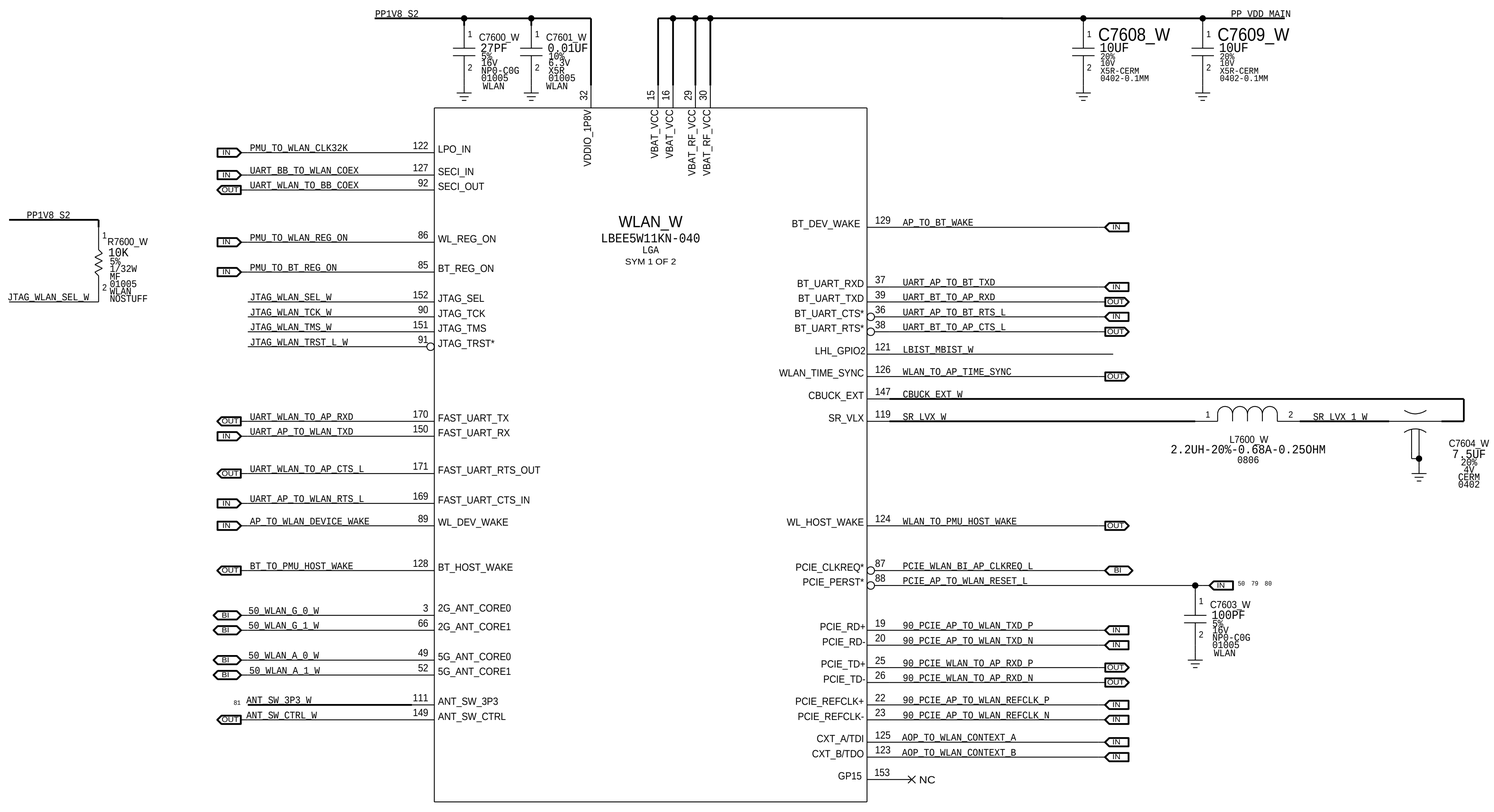

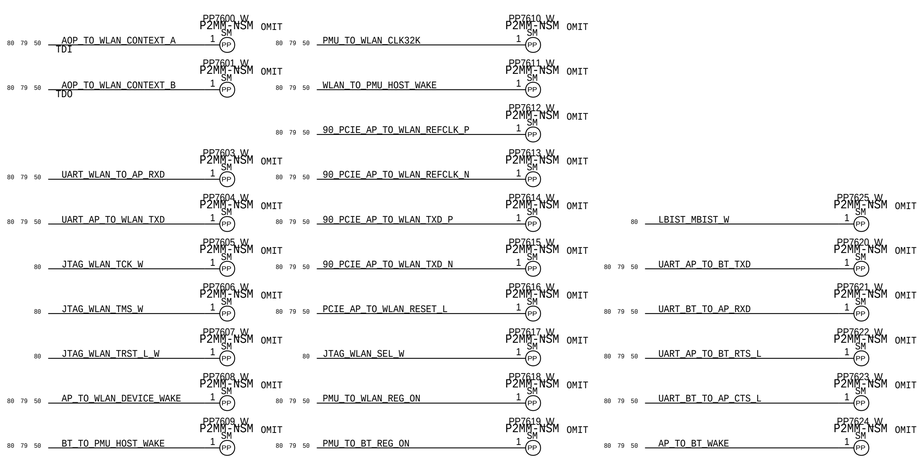

PART NUMBER	ALTERNATE FOR PART NUMBER	BOM OPTION	REF DES	COMMENTS:
339S00397	339S00399	BOM_TABLE_ALTS	WLAN_W	ALT WIFI/BT MODULE

SYNC_MASTER=WIFI SYNC_DATE=11/28/2016

PAGE TITLE: Guinness

DRAWING NUMBER	051-02159
SIZE	D
REVISION	10.0.0
BRANCH	
PAGE	4 OF 5
SHEET	80 OF 81

WIFI LOWER ANTENNA FEED

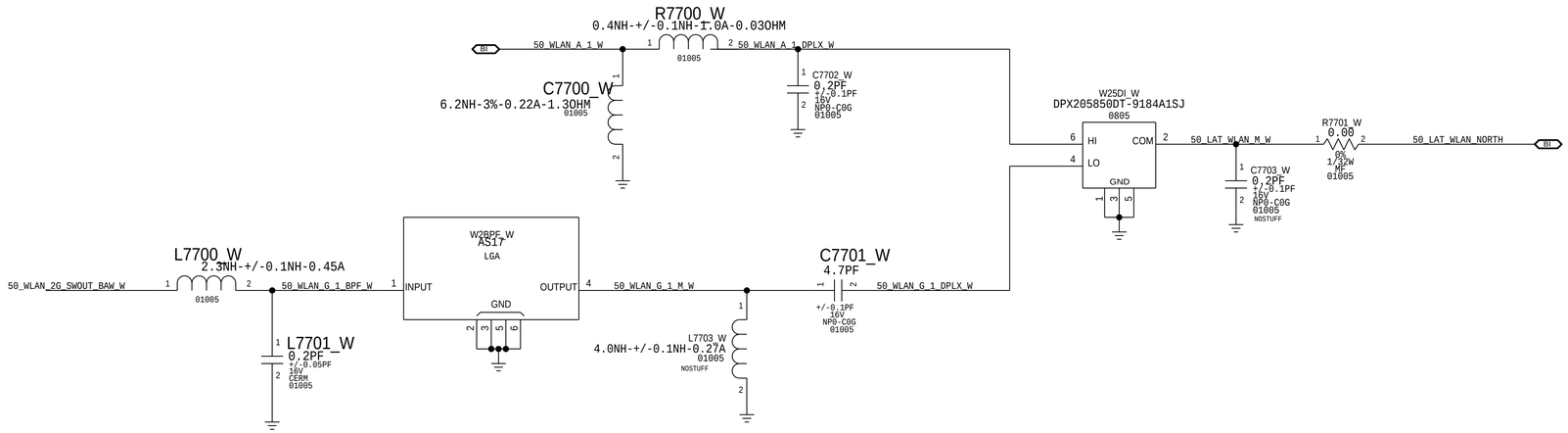

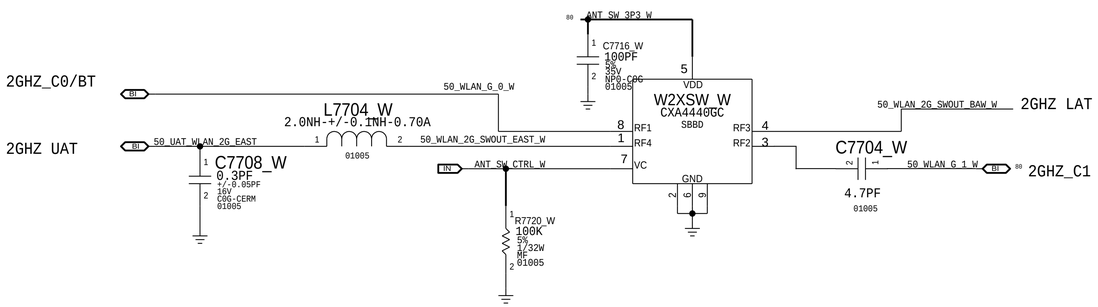

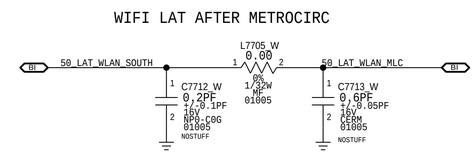

WIFI UPPER ANTENNA FEED

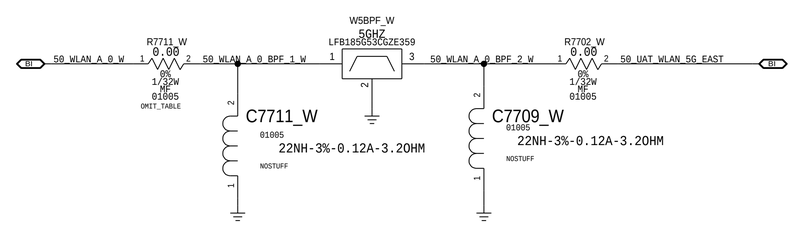

PART#	QTY	DESCRIPTION	REFERENCE DESIGNATOR(S)	CRITICAL	BOM OPTION
152S00498	1	5G CORE0 BPF MATCH	R7711_W	CRITICAL	D211
117S0161	1	5G CORE0 BPF MATCH	R7711_W	CRITICAL	JPN
117S0161	1	5G CORE0 BPF MATCH	R7711_W	CRITICAL	ROW

SYNC_DATE=11/28/2016

PAGE TITLE: $PAGE_TITLE=WiFiANTFeeds

DRAWING NUMBER: 051-02159 SIZE: D

REVISION: 10.0.0

BRANCH:

PAGE: 5 OF 5

SHEET: 81 OF 81

1. ALL RESISTANCE VALUES ARE IN OHMS, 0.1 WATT +/- 5%.
2. ALL CAPACITANCE VALUES ARE IN MICROFARADS.
3. ALL CRYSTALS & OSCILLATOR VALUES ARE IN HERTZ.

REV	ECN	DESCRIPTION OF REVISION	CK APPD / DATE
10	0008927012	ENGINEERING RELEASED	2017-06-06

NFC_MLB D20/D21
MAY 15, 2017

PART#	QTY	DESCRIPTION	REFERENCE DESIGNATOR(S)	CRITICAL	BOM OPTION
138S00159	3	CAP,SOFT TERM,2.2UF,6.3V,0201	C7500_S,C7502_S, C7505_S	CRITICAL	SOFT_CAP
138S0831	3	CAP,TYPICAL,2.2UF,6.3V,0201	C7500_S,C7502_S,C7505_S	CRITICAL	TYPICAL_CAP

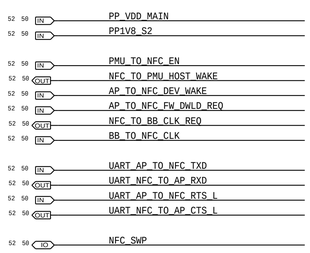

PART#	QTY	DESCRIPTION	REFERENCE DESIGNATOR(S)	BOM OPTION
131S0882	1	390PF, 0201, 2%, 25V	C7514_S	D20_JPN
131S00026	1	820PF, 0201, 2%, 25V	C7515_S	D20_JPN
131S00033	1	680PF, 0201, 2%, 25V	C7516_S	D20_JPN
131S0883	1	220PF, 0201, 2%, 50V	C7518_S	D20_JPN
131S00025	1	1000PF, 0201, 2%, 25V	C7510_S	D20_JPN
131S00025	1	1000PF, 0201, 2%, 25V	C7513_S	D20_JPN
157S00022	1	TDK, BALUN, 11T	T7500_S	D20_JPN

PART#	QTY	DESCRIPTION	REFERENCE DESIGNATOR(S)	BOM OPTION
131S00138	1	39PF, 0201, 2%, 50V	C7512_S	D21_JPN
131S00081	1	270PF, 0201, 2%, 25V	C7514_S	D21_JPN
131S00025	1	1000PF, 0201, 2%, 25V	C7515_S	D21_JPN
131S00033	1	680PF, 0201, 2%, 25V	C7516_S	D21_JPN
131S00019	1	150PF, 0201, 2%, 50V	C7518_S	D21_JPN
131S00033	1	680PF, 0201, 2%, 25V	C7510_S	D21_JPN
131S00033	1	680PF, 0201, 2%, 25V	C7513_S	D21_JPN
157S00023	1	MURATA, BALUN, 11T	T7500_S	D21_JPN

PART#	QTY	DESCRIPTION	REFERENCE DESIGNATOR(S)	BOM OPTION
131S00138	1	39PF, 0201, 2%, 50V	C7512_S	D20_ROW
131S00016	1	470PF, 0201, 2%, 25V	C7514_S	D20_ROW
131S00025	1	1000PF, 0201, 2%, 25V	C7515_S	D20_ROW
131S0825	1	560PF, 0201, 2%, 25V	C7516_S	D20_ROW
131S0883	1	220PF, 0201, 2%, 50V	C7518_S	D20_ROW
131S00026	1	820PF, 0201, 2%, 25V	C7510_S	D20_ROW
131S00026	1	820PF, 0201, 2%, 25V	C7513_S	D20_ROW
157S00022	1	TDK, BALUN, 11T	T7500_S	D20_ROW

PART#	QTY	DESCRIPTION	REFERENCE DESIGNATOR(S)	BOM OPTION
131S00138	1	39PF, 0201, 2%, 50V	C7512_S	D21_ROW
131S00081	1	270PF, 0201, 2%, 25V	C7514_S	D21_ROW
131S00025	1	1000PF, 0201, 2%, 25V	C7515_S	D21_ROW
131S00033	1	680PF, 0201, 2%, 25V	C7516_S	D21_ROW
131S00019	1	150PF, 0201, 2%, 50V	C7518_S	D21_ROW
131S00033	1	680PF, 0201, 2%, 25V	C7510_S	D21_ROW
131S00033	1	680PF, 0201, 2%, 25V	C7513_S	D21_ROW
157S00023	1	MURATA, BALUN, 11T	T7500_S	D21_ROW

PART#	QTY	DESCRIPTION	REFERENCE DESIGNATOR(S)	BOM OPTION
131S00138	1	39PF, 0201, 2%, 50V	C7512_S	D201
131S00016	1	470PF, 0201, 2%, 25V	C7514_S	D201
131S00025	1	1000PF, 0201, 2%, 25V	C7515_S	D201
131S0825	1	560PF, 0201, 2%, 25V	C7516_S	D201
131S0883	1	220PF, 0201, 2%, 50V	C7518_S	D201
131S00026	1	820PF, 0201, 2%, 25V	C7510_S	D201
131S00026	1	820PF, 0201, 2%, 25V	C7513_S	D201
157S00022	1	TDK, BALUN, 11T	T7500_S	D201

PART#	QTY	DESCRIPTION	REFERENCE DESIGNATOR(S)	BOM OPTION
131S00138	1	39PF, 0201, 2%, 50V	C7512_S	D211
131S00081	1	270PF, 0201, 2%, 25V	C7514_S	D211
131S00025	1	1000PF, 0201, 2%, 25V	C7515_S	D211
131S00033	1	680PF, 0201, 2%, 25V	C7516_S	D211
131S00019	1	150PF, 0201, 2%, 50V	C7518_S	D211
131S00033	1	680PF, 0201, 2%, 25V	C7510_S	D211
131S00033	1	680PF, 0201, 2%, 25V	C7513_S	D211
157S00023	1	MURATA, BALUN, 11T	T7500_S	D211

page1

DRAWING TITLE	SCH,MLB,D21
DRAWING NUMBER	051-02159
SIZE	D
REVISION	10.0.0
BRANCH	
PAGE	1 OF 75
SHEET	51 OF 81

STOCKHOLM

NFC CONTROLLER

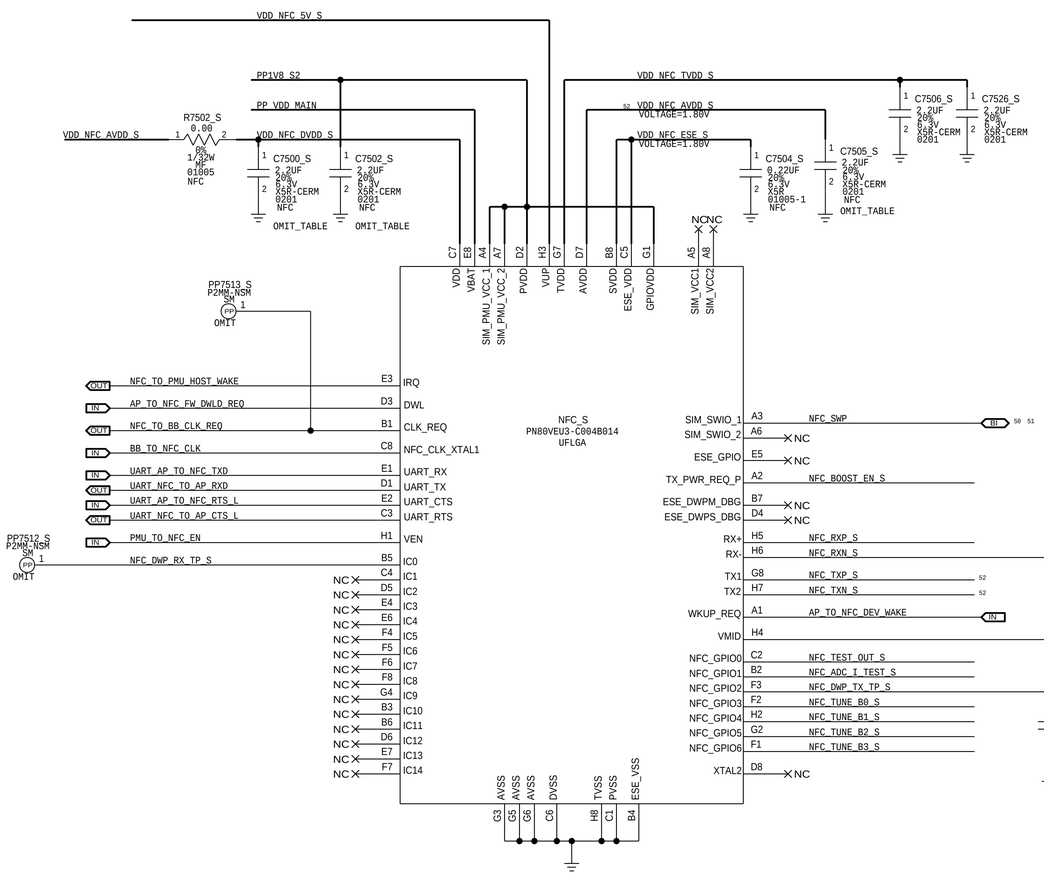

5V BOOSTER

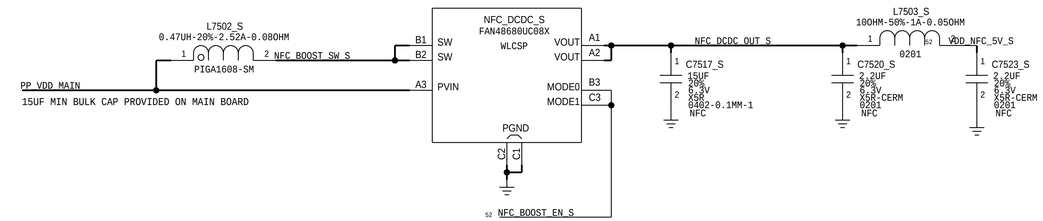

NFC FRONT END

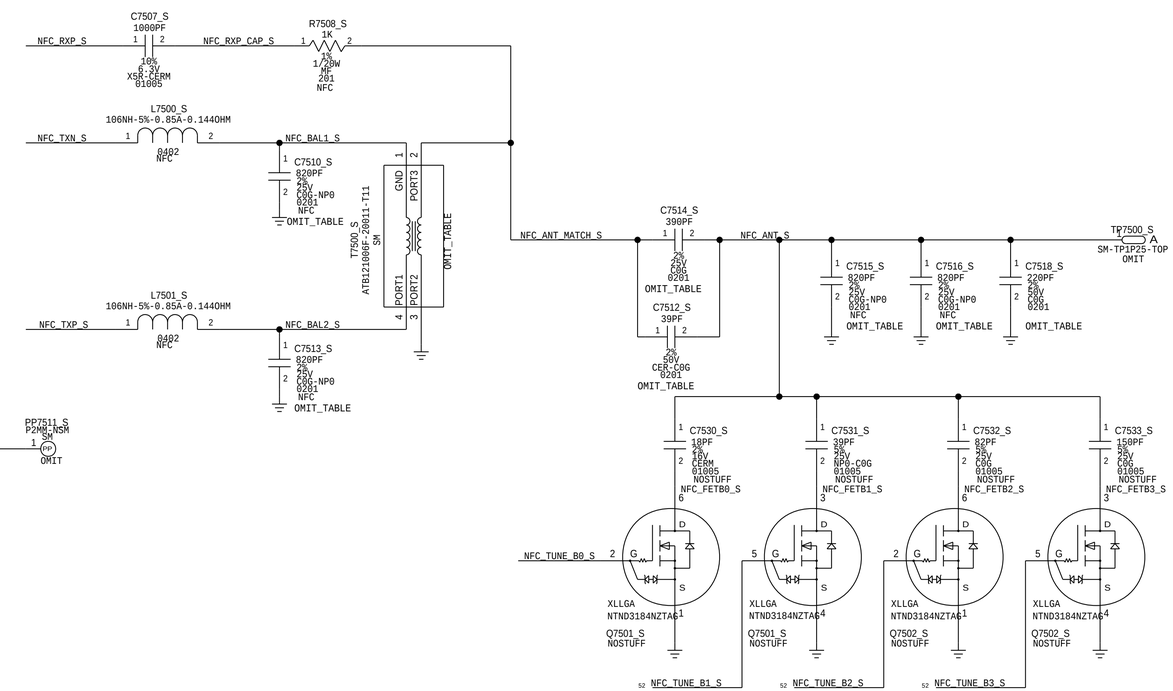

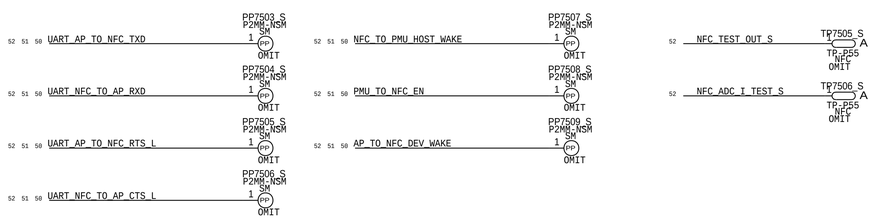

PAGE TITLE	NFC
DRAWING NUMBER	051-02159
SIZE	D
REVISION	10.0.0
BRANCH	
PAGE	75 OF 75
SHEET	52 OF 81

1. ALL RESISTANCE VALUES ARE IN OHMS, 0.1 WATT +/- 5%.
2. ALL CAPACITANCE VALUES ARE IN MICROFARADS.
3. ALL CRYSTALS & OSCILLATOR VALUES ARE IN HERTZ.

REV	ECN	DESCRIPTION OF REVISION	CK APPD / DATE
7	0008448938	ENGINEERING RELEASED	2017-04-11

ICE17.2 RADIO_MLB

Tue Apr 11 16:10:08 2017

PDF PAGE	CSA PAGE	CONTENTS
2	2	BASEBAND
3	3	BASEBAND MEMORY/DEBUG
4	4	BASEBAND POWER
5	5	BASEBAND PMIC
6	6	TRANSCEIVERS
7	7	ET MODULATOR
8	8	TDD TRANSMIT
9	9	FDD TRANSMIT
10	10	PRIMARY RECEIVE
11	11	LOWER ANTENNA & COUPLERS
12	12	DIVERSITY RECEIVE ASM'S
13	13	DIVERSITY RECEIVE LNA'S
14	14	UPPER ANTENNA FEEDS
15	15	GNSS
16	16	TEST POINTS & SIM

ALTERNATES

PART NUMBER	ALTERNATE FOR PART NUMBER	REFERENCE DESIGNATOR(S)	DESCRIPTION	BOM OPTION
197S00040	197S00044	VTCXO_K	AVX VC-TCXO	?
197S00042	197S00044	VTCXO_K	NDK VC-TCXO	?
335S00013	335S0894	EPROM_K	ON SEMI EEPROM	?
138S0719	138S1103	C522_K	MURATA	?
138S00133	138S00128	C509_K, C523_K, C605_K, C624_K, C626_K, C1114_K, C1116_K	MURATA	?
138S00049	138S00032	C402_K, C433_K, C437_K, C510_K, C720_K	MURATA	?
138S0831	138S00032	C402_K, C433_K, C437_K, C510_K, C720_K	MURATA	?
138S00086	138S0884	C500_K, C501_K, C502_K, C514_K, C515_K	MURATA	?
339S00363	339S00353	GNSS_K	PILSNER STATS	?

BOM OPTIONS

PART#	QTY	DESCRIPTION	REFERENCE DESIGNATOR(S)	CRITICAL	BOM OPTION
998-05780	1	BASEBAND, UNFUSED	U_BB_K	CRITICAL	BB_UNFUSED
998-05781	1	BASEBAND, LOCAL FUSED	U_BB_K	CRITICAL	BB_LOCAL_FUSED
998-05782	1	BASEBAND, DEV FUSED	U_BB_K	CRITICAL	BB_DEV_FUSED
337S00244	1	BASEBAND, PRODUCTION FUSED	U_BB_K	CRITICAL	BB_PROD_FUSED
138S00159	7	CAP,SOFT-TERM,2.2UF,6.3V,0201,KYOCERA	C402_K, C437_K, C438_K, C433_K, C510_K, C720_K, C1001_K		SOFT_CAP
138S0831	7	CAP,TYPICAL,2.2UF,6.3V,0201,MURATA	C402_K, C437_K, C438_K, C433_K, C510_K, C720_K, C1001_K		TYPICAL_CAP

RADIO_MLB PORTS

POWER

28	27 20 19 18 17 12	IN	PP_VDD_MAIN
28 27 26 23 18 17 16 15 14 12	29	IN	PP1V8_S2
	29 12	IN	PP3V0_S2

CLOCKS

PMU_TO_BB_GNSS_32K

BB CONTROL

28	17 14 12	IN	AP_TO_BBPMU_RADIO_ON_L
28	17 12	IN	PMU_TO_BBPMU_RESET_L
28	15 12	IN	AP_TO_BB_RESET_L
	14 12	OUT	BB_TO_AP_RESET_DETECT_L
28	14 12	OUT	BB_TO_STROBE_DRIVER_GSM_BURST_IND
	28 14	IN	AP_TO_BB_MESA_ON_K
	14 12	IN	AP_TO_BB_COREDUMP
28	17 12	IN	AP_TO_MANY_BSYNC
	14 12	IN	AP_TO_BB_IPC_GPIO1

PCIE

28	14 12	IN	90_PCIE_AP_TO_BB_REFCLK_P
28	14 12	IN	90_PCIE_AP_TO_BB_REFCLK_N
28	14 12	IN	90_PCIE_AP_TO_BB_TXD_P
28	14 12	IN	90_PCIE_AP_TO_BB_TXD_N
28	14 12	OUT	90_PCIE_BB_TO_AP_RXD_P
28	14 12	OUT	90_PCIE_BB_TO_AP_RXD_N
28	14 12	IN	PCIE_AP_TO_BB_RESET_L
	16 2	IO	PCIE_BB_BI_AP_CLKREQ_L
28	14 12	OUT	BB_TO_PMU_PCIE_HOST_WAKE_L
			AP_TO_BB_DEVICE_WAKE

UART

28	14	IN	UART_AP_TO_BB_TXD_K
28	14	OUT	UART_BB_TO_AP_RXD_K

AOP

14	12	IN	UART_AOP_TO_BB_TXD
14	12	OUT	UART_BB_TO_AOP_RXD

AUDIO

14	12	OUT	I2S_BB_TO_AP_BCLK
14	12	OUT	I2S_BB_TO_AP_LRCLK
14	12	IN	I2S_AP_TO_BB_DOUT
14	12	OUT	I2S_BB_TO_AP_DIN

WLAN

28	14 12	IN	UART_BB_TO_WLAN_COEX
28	14 12	OUT	UART_WLAN_TO_BB_COEX

NFC

	16	IO	NFC_SWP1
	18 12	IN	NFC_TO_BB_CLK_REQ
28	18 12	OUT	BB_TO_NFC_CLK

GNSS

28	27 12	IN	PMU_TO_GNSS_EN
28	27 12	IN	UART_AP_TO_GNSS_TXD
28	27 12	OUT	UART_GNSS_TO_AP_RXD
28	27 12	IN	UART_AP_TO_GNSS_RTS_L
28	27 12	OUT	UART_GNSS_TO_AP_CTS_L
28	27 12	IN	AP_TO_BB_TIME_MARK
	27 12	IN	AP_TO_GNSS_WAKE

DEBUG

28	15 12	IN	SWD_AOP_TO_MANY_SWCLK
	16 3	IO	SWD_AOP_BI_BB_SWDIO
28	14 12	IN	PMU_TO_BB_USB_VBUS_DETECT
	16 2	IO	90_USB_BB_DATA_P
	16 2	IO	90_USB_BB_DATA_N

ANTENNA FEEDS

17		IO	50_LAT_WLAN
17		IO	50_UAT_WLAN_2G_SOUTH
17		IO	50_UAT_WLAN_5G_SOUTH

RADIO_MLB

DRAWING TITLE	SCH,MLB,BOT,X893
DRAWING NUMBER	051-02247
SIZE	D
REVISION	7.0.0
BRANCH	evt-1
PAGE	1 OF 17
SHEET	13 OF 34

CONFIDENTIAL AND PROPRIETARY APPLE SYSTEM DESIGN. FOR REFERENCE PURPOSE ONLY - NOT A CHANGE REQUEST

BASEBAND

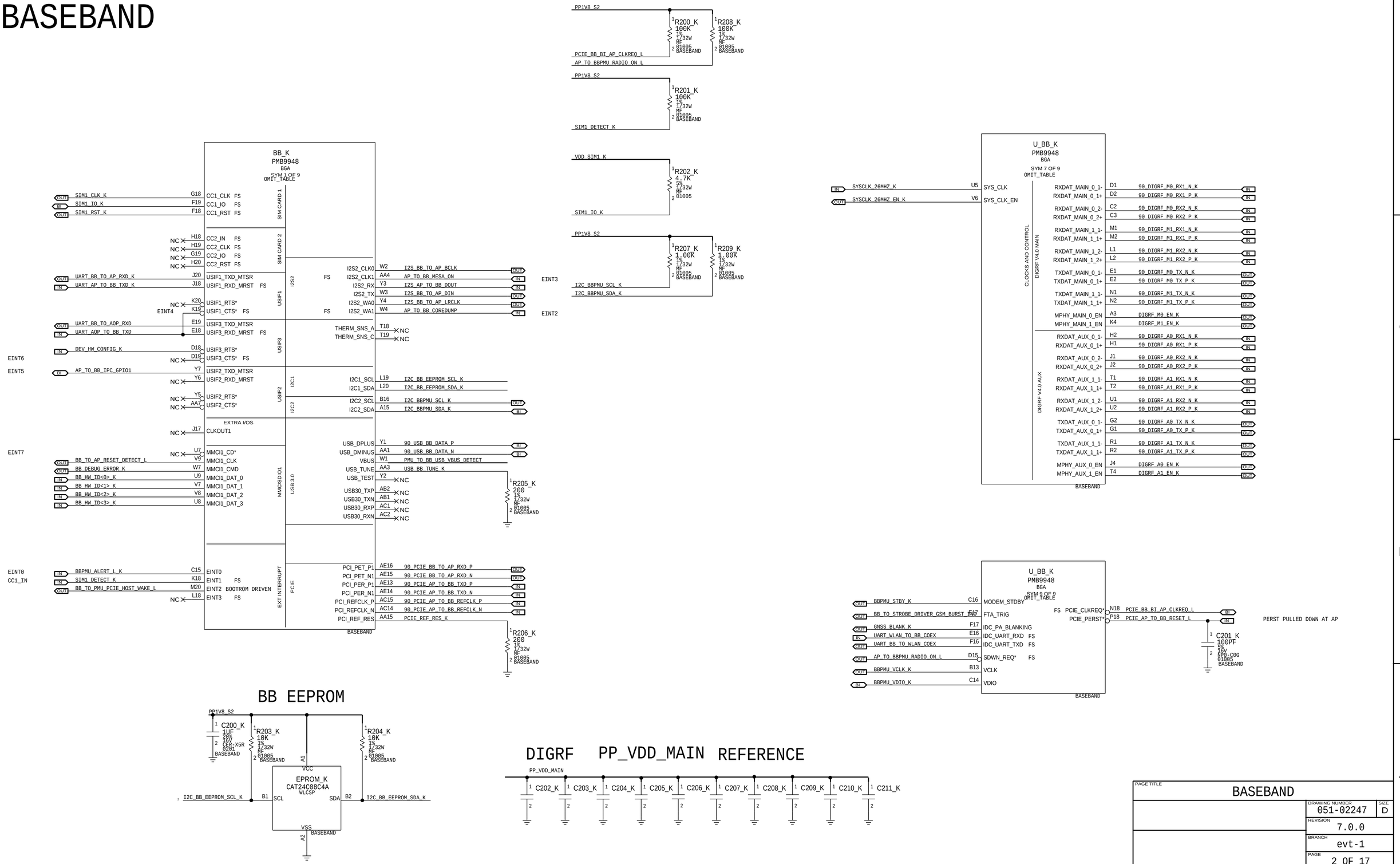

PAGE TITLE	BASEBAND
DRAWING NUMBER	051-02247
SIZE	D
REVISION	7.0.0
BRANCH	evt-1
PAGE	2 OF 17
SHEET	14 OF 34

CONFIDENTIAL AND PROPRIETARY APPLE SYSTEM DESIGN. FOR REFERENCE PURPOSE ONLY - NOT A CHANGE REQUEST

BASEBAND MEMORY/DEBUG

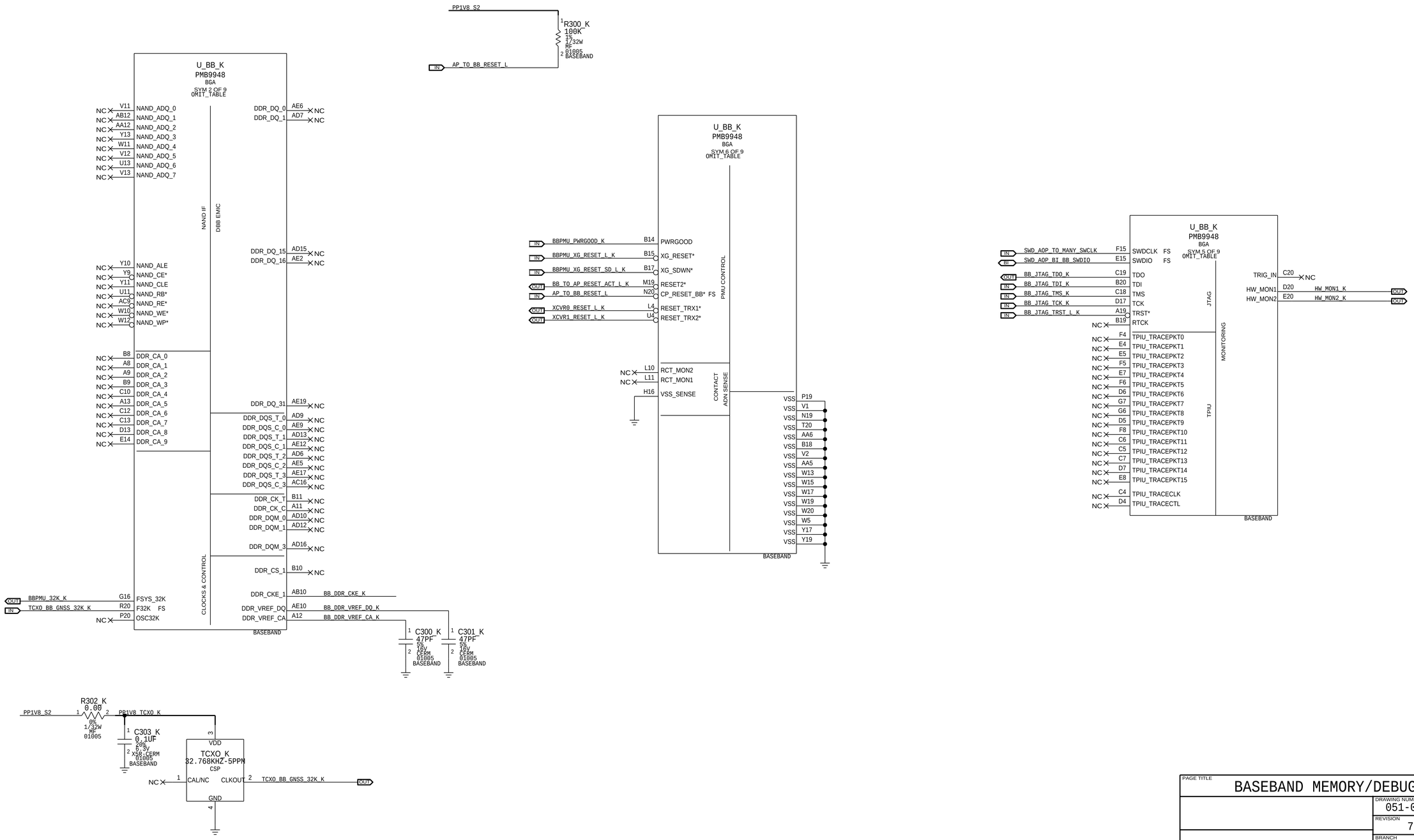

CONFIDENTIAL AND PROPRIETARY APPLE SYSTEM DESIGN. FOR REFERENCE PURPOSE ONLY - NOT A CHANGE REQUEST

PAGE TITLE	BASEBAND MEMORY/DEBUG
DRAWING NUMBER	051-02247
SIZE	D
REVISION	7.0.0
BRANCH	evt-1
PAGE	3 OF 17
SHEET	15 OF 34

BASEBAND POWER

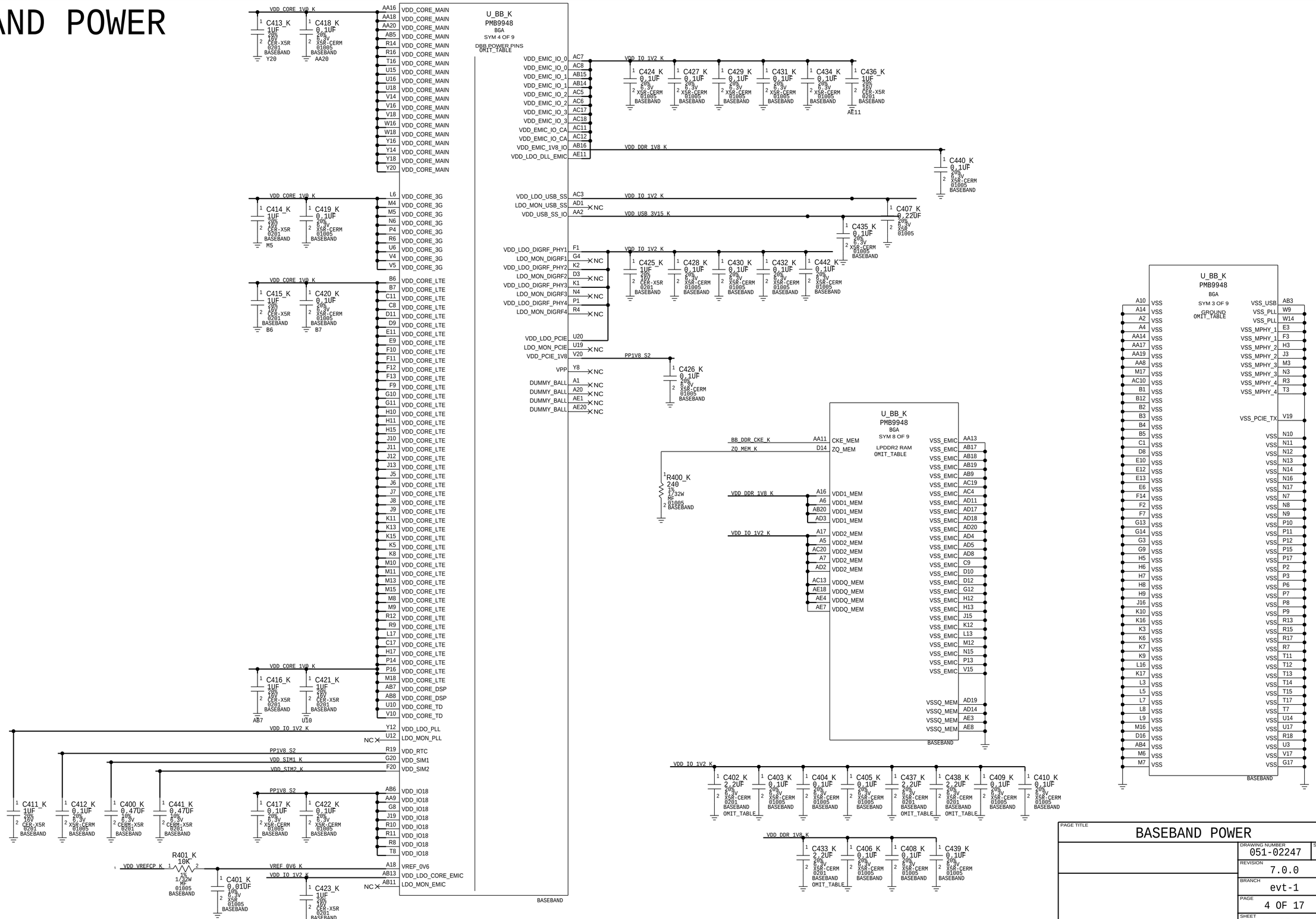

CONFIDENTIAL AND PROPRIETARY APPLE SYSTEM DESIGN. FOR REFERENCE PURPOSE ONLY - NOT A CHANGE REQUEST

PAGE TITLE	BASEBAND POWER
DRAWING NUMBER	051-02247
SIZE	D
REVISION	7.0.0
BRANCH	evt-1
PAGE	4 OF 17
SHEET	16 OF 34

BASEBAND PMIC

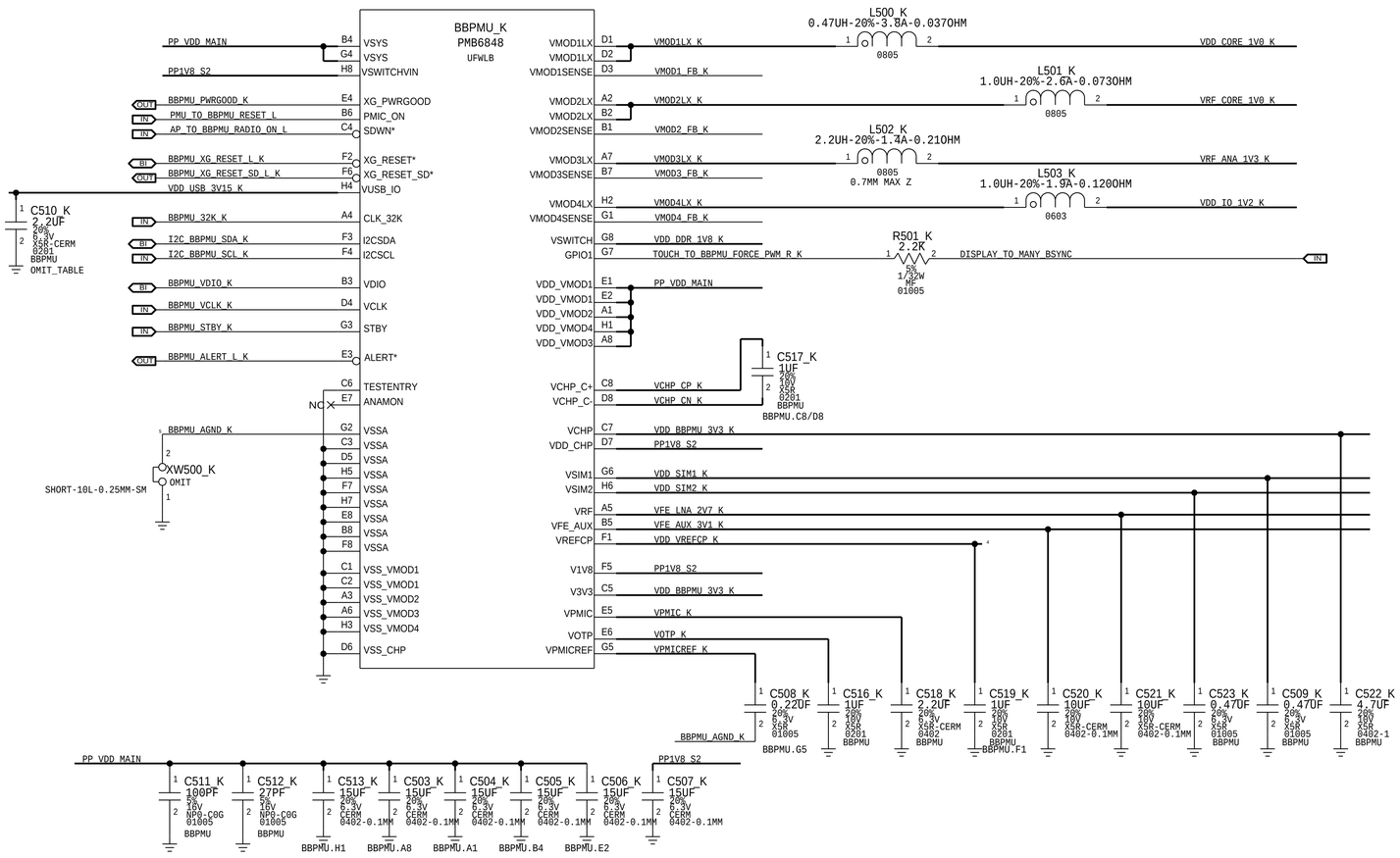

CONFIDENTIAL AND PROPRIETARY APPLE SYSTEM DESIGN. FOR REFERENCE PURPOSE ONLY - NOT A CHANGE REQUEST

PAGE TITLE	BASEBAND PMIC
DRAWING NUMBER	051-02247
SIZE	D
REVISION	7.0.0
BRANCH	evt-1
PAGE	5 OF 17
SHEET	17 OF 34

TRANSCEIVERS

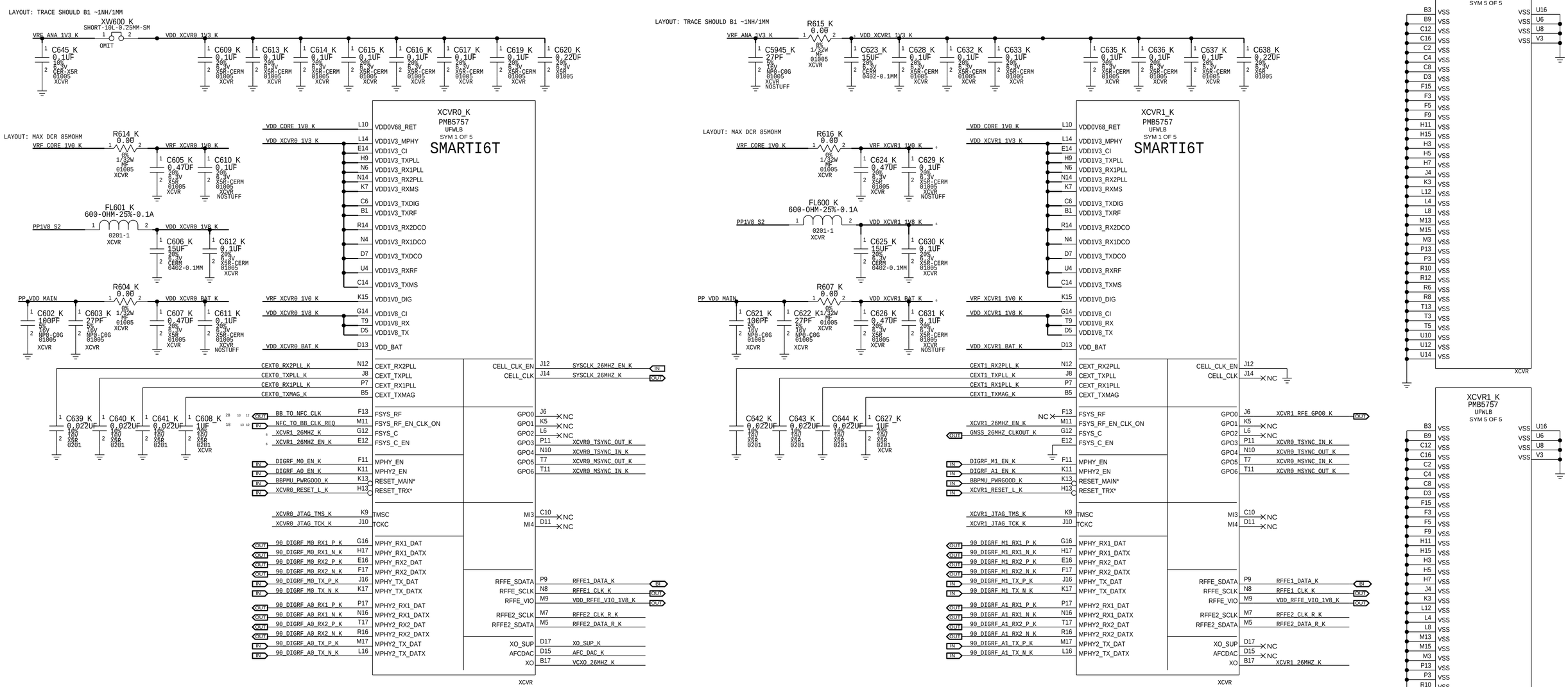

PAGE TITLE	TRANSCEIVERS
DRAWING NUMBER	051-02247
SIZE	D
REVISION	7.0.0
BRANCH	evt-1
PAGE	6 OF 17
SHEET	18 OF 34

CONFIDENTIAL AND PROPRIETARY APPLE SYSTEM DESIGN. FOR REFERENCE PURPOSE ONLY - NOT A CHANGE REQUEST

ET MODULATOR

ALPES II MODULE

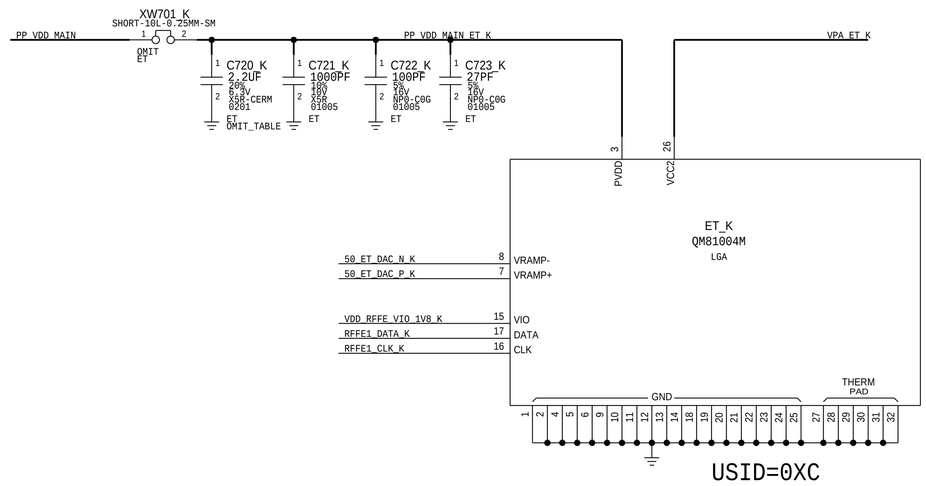

USID=0XC

PAGE TITLE	ET MODULATOR
DRAWING NUMBER	051-02247
SIZE	D
REVISION	7.0.0
BRANCH	evt-1
PAGE	7 OF 17
SHEET	19 OF 34

CONFIDENTIAL AND PROPRIETARY APPLE SYSTEM DESIGN. FOR REFERENCE PURPOSE ONLY - NOT A CHANGE REQUEST

TDD TRANSMIT

2G PA

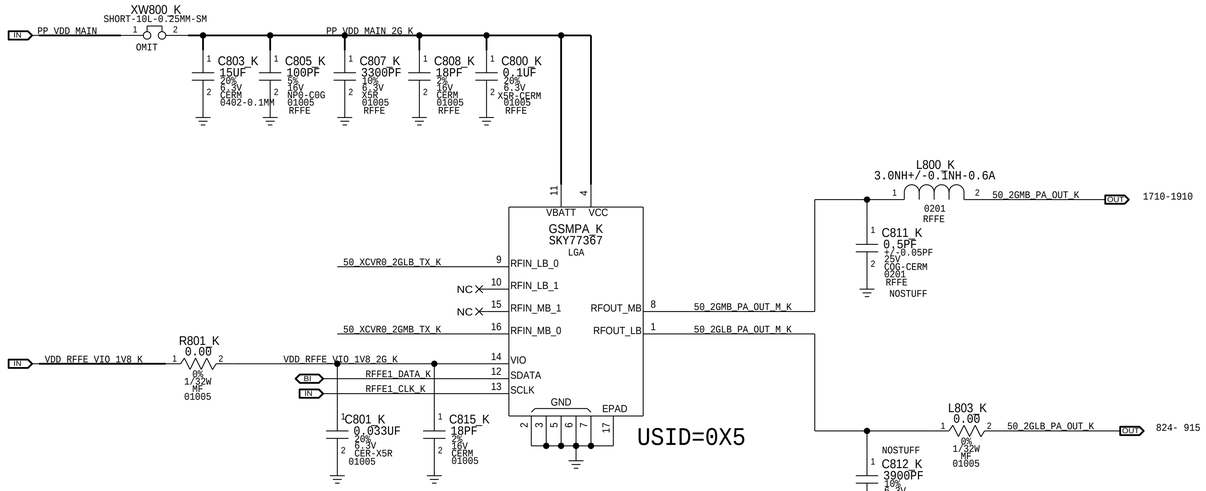

XCVR0 TX

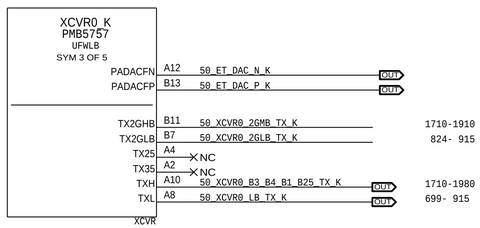

MB HB TDD S-PAD

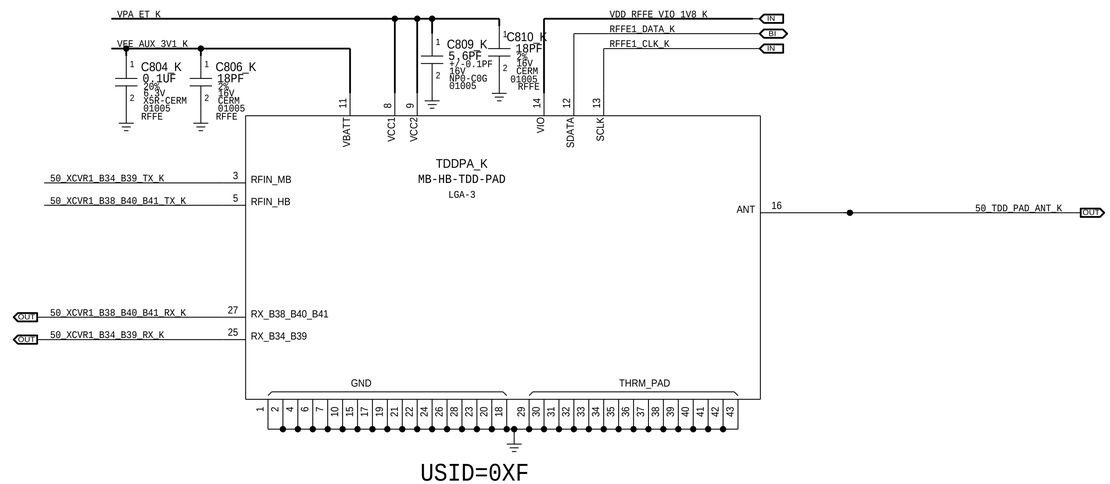

XCVR1 TX

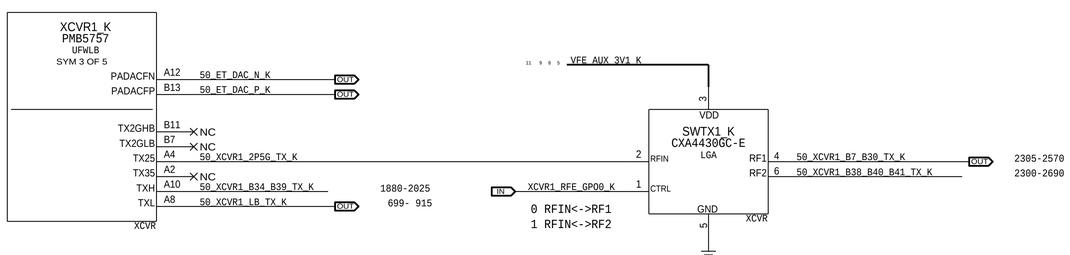

PAGE TITLE	TDD TRANSMIT
DRAWING NUMBER	051-02247
SIZE	D
REVISION	7.0.0
BRANCH	evt-1
PAGE	8 OF 17
SHEET	20 OF 34

CONFIDENTIAL AND PROPRIETARY APPLE SYSTEM DESIGN. FOR REFERENCE PURPOSE ONLY - NOT A CHANGE REQUEST

FDD TRANSMIT

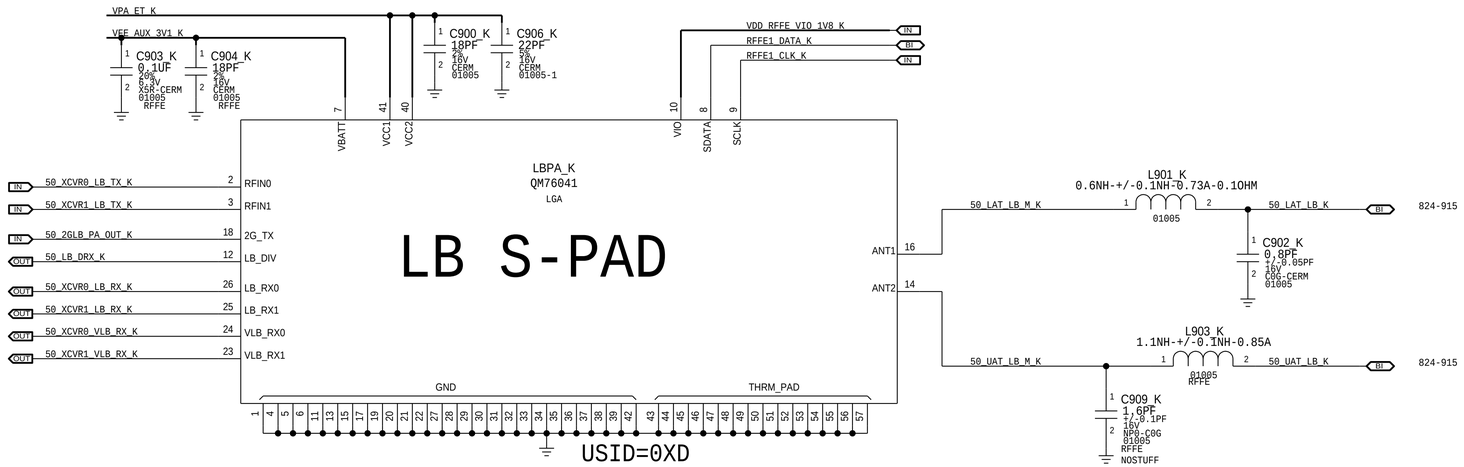

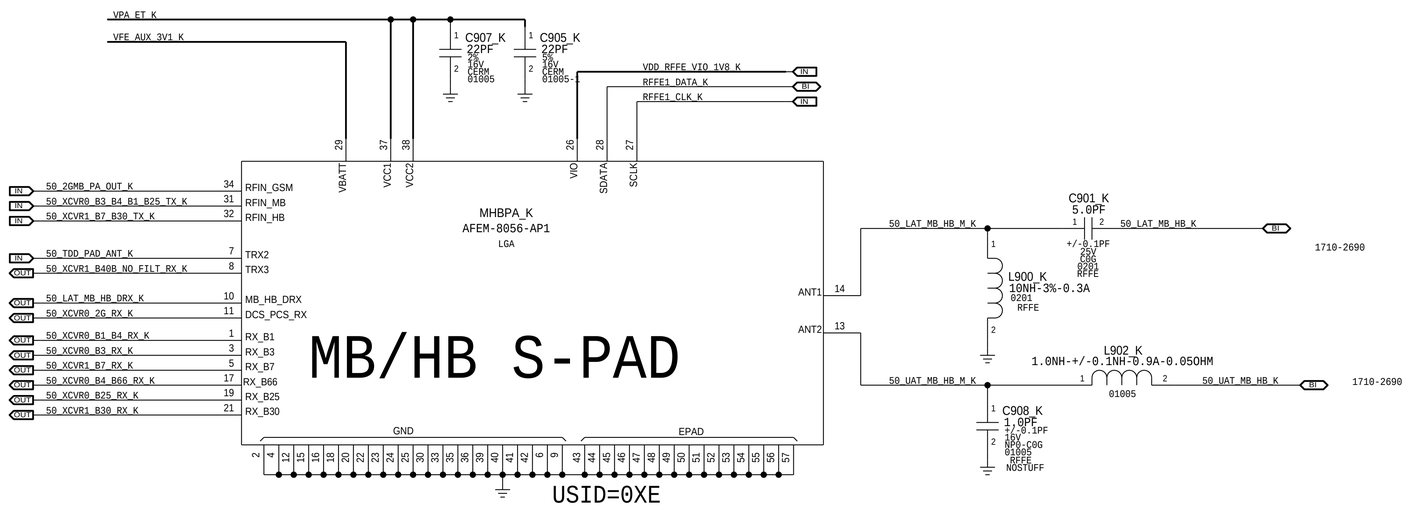

PAGE TITLE	FDD TRANSMIT
DRAWING NUMBER	051-02247
SIZE	D
REVISION	7.0.0
BRANCH	evt-1
PAGE	9 OF 17
SHEET	21 OF 34

CONFIDENTIAL AND PROPRIETARY APPLE SYSTEM DESIGN. FOR REFERENCE PURPOSE ONLY - NOT A CHANGE REQUEST

PRIMARY RECIEVE

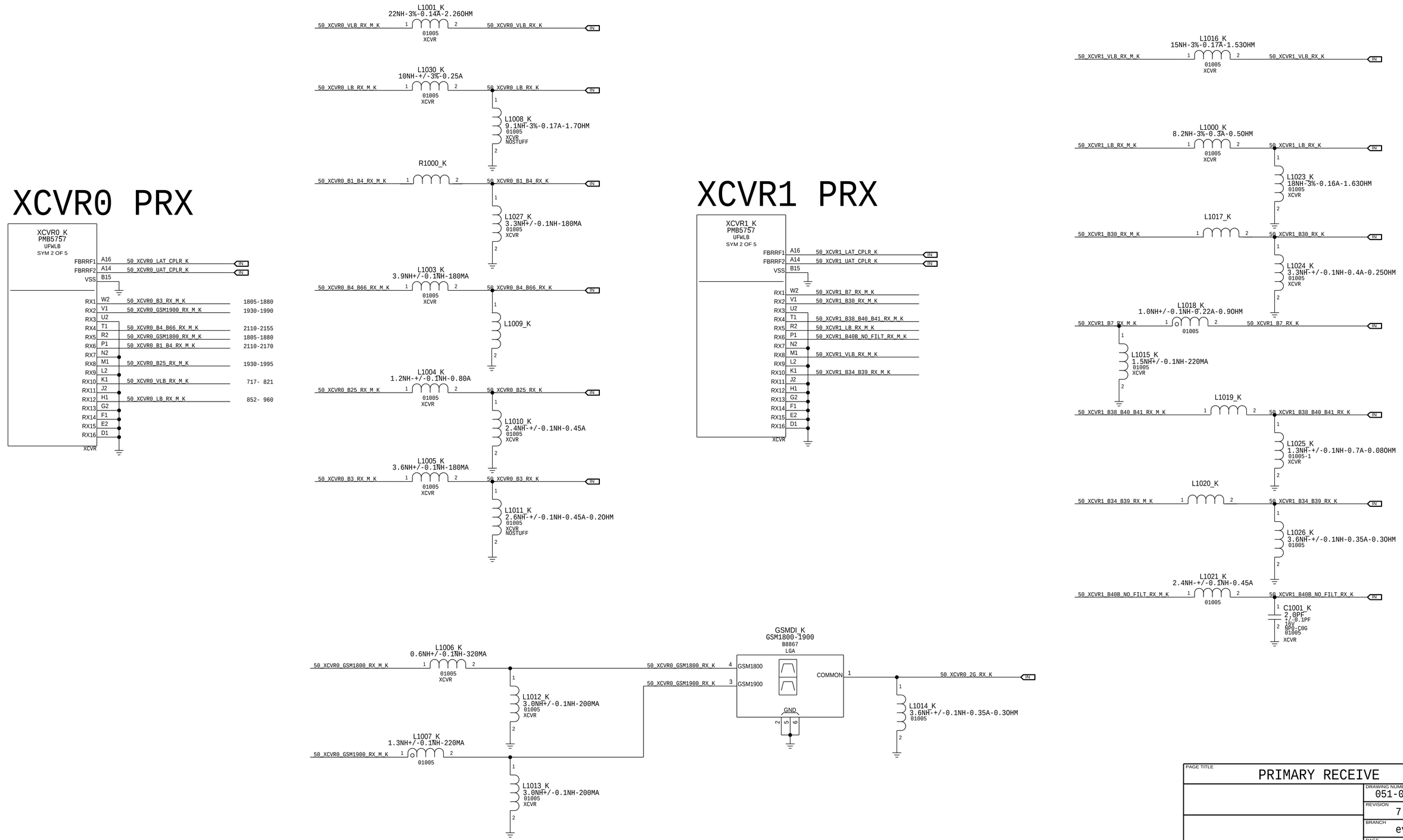

PAGE TITLE	PRIMARY RECEIVE
DRAWING NUMBER	051-02247
SIZE	D
REVISION	7.0.0
BRANCH	evt-1
PAGE	10 OF 17
SHEET	22 OF 34

CONFIDENTIAL AND PROPRIETARY APPLE SYSTEM DESIGN. FOR REFERENCE PURPOSE ONLY - NOT A CHANGE REQUEST

LOWER ANTENNA AND COUPLER

LOWER ANTENNA COUPLER

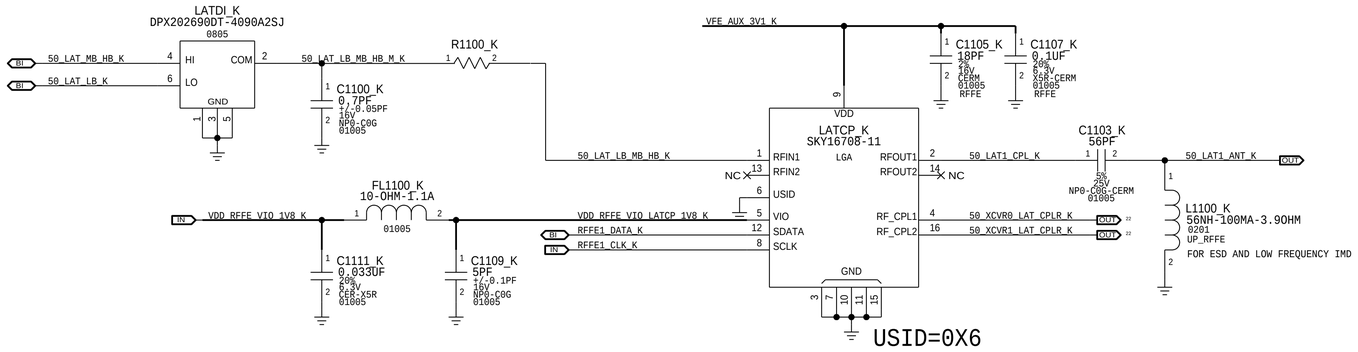

UPPER ANTENNA COUPLER

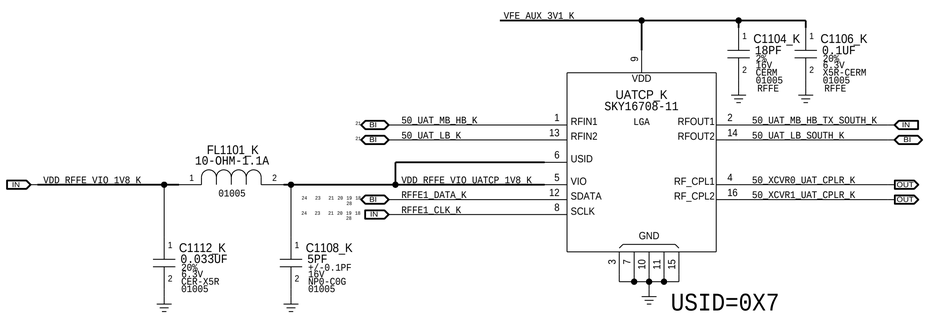

LAT TUNER GPO

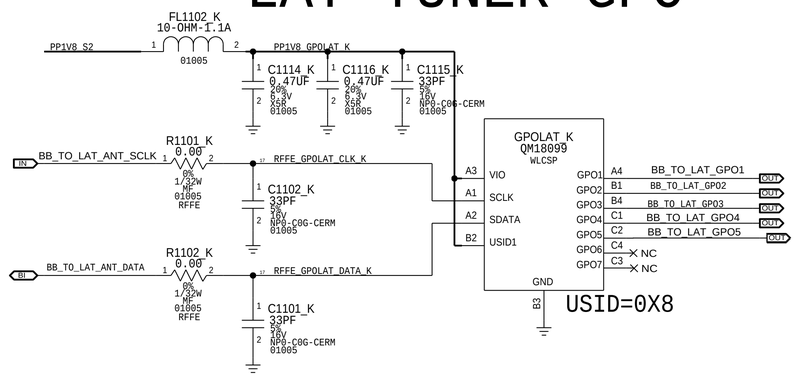

PAGE TITLE	LOWER ANTENNA & COUPLERS
DRAWING NUMBER	051-02247
SIZE	D
REVISION	7.0.0
BRANCH	evt-1
PAGE	11 OF 17
SHEET	23 OF 34

CONFIDENTIAL AND PROPRIETARY APPLE SYSTEM DESIGN. FOR REFERENCE PURPOSE ONLY - NOT A CHANGE REQUEST

DIVERSITY RECEIVE ASM'S

XCVR0 DRX

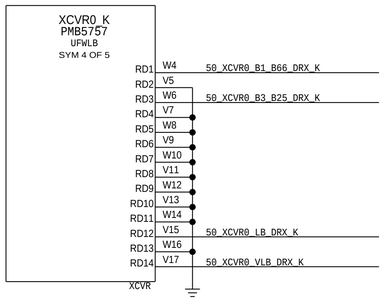

XCVR1 DRX

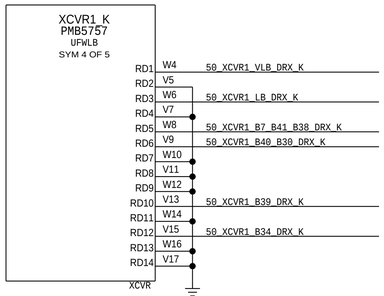

RFFE FILTERING

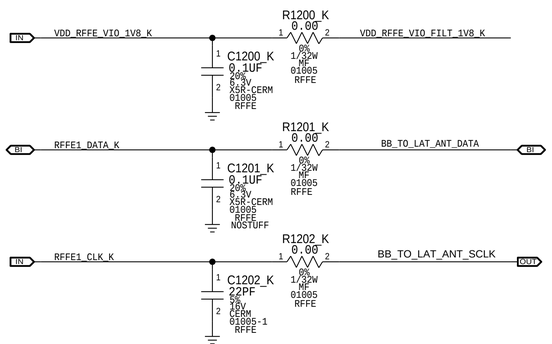

DRX DSM

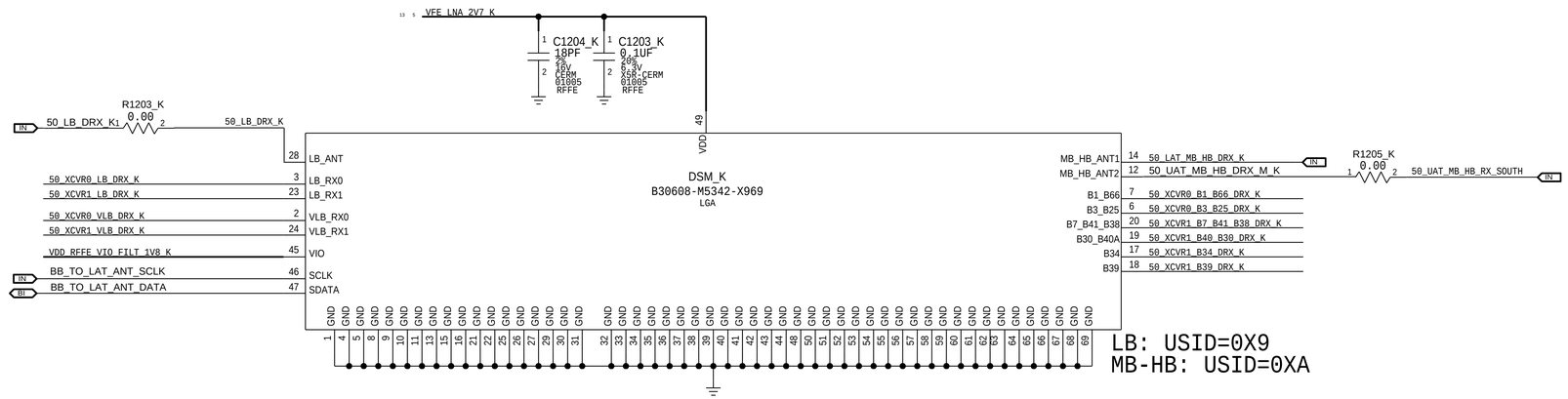

LB: USID=0X9
MB-HB: USID=0XA

CONFIDENTIAL AND PROPRIETARY APPLE SYSTEM DESIGN. FOR REFERENCE PURPOSE ONLY - NOT A CHANGE REQUEST

PAGE TITLE	DIVERSITY RECEIVE ASM'S
DRAWING NUMBER	051-02247
SIZE	D
REVISION	7.0.0
BRANCH	evt-1
PAGE	12 OF 17
SHEET	24 OF 34

DIVERSITY RECEIVE LNAS

LB DRX LNA

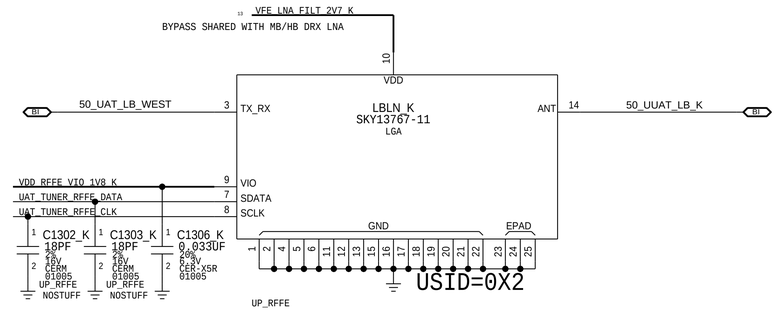

MB/HB DRX LNA

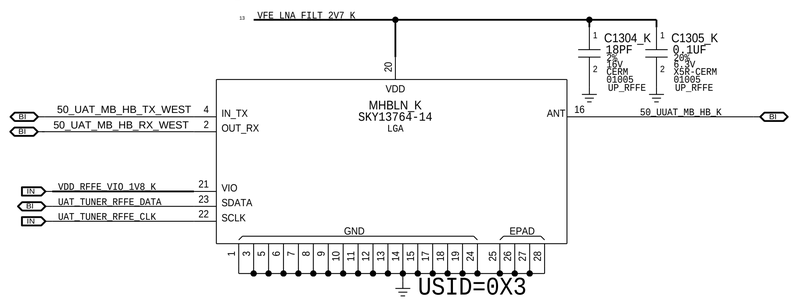

RFFE2 IMPEDANCE MATCHING

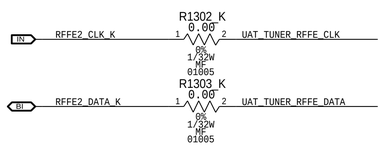

CONFIDENTIAL AND PROPRIETARY APPLE SYSTEM DESIGN. FOR REFERENCE PURPOSE ONLY - NOT A CHANGE REQUEST

PAGE TITLE	DIVERSITY RECEIVE LNA'S
DRAWING NUMBER	051-02247
SIZE	D
REVISION	7.0.0
BRANCH	evt-1
PAGE	13 OF 17
SHEET	25 OF 34

UPPER ANTENNA FEEDS

UAT1

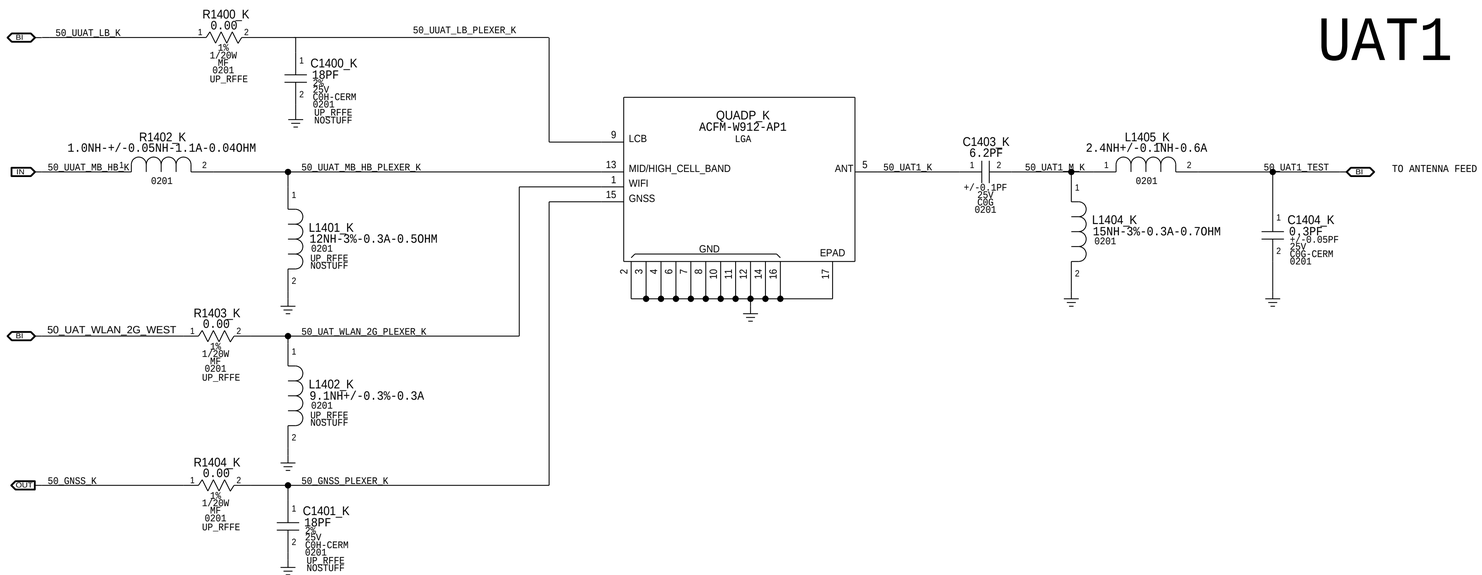

UAT TUNER GPO

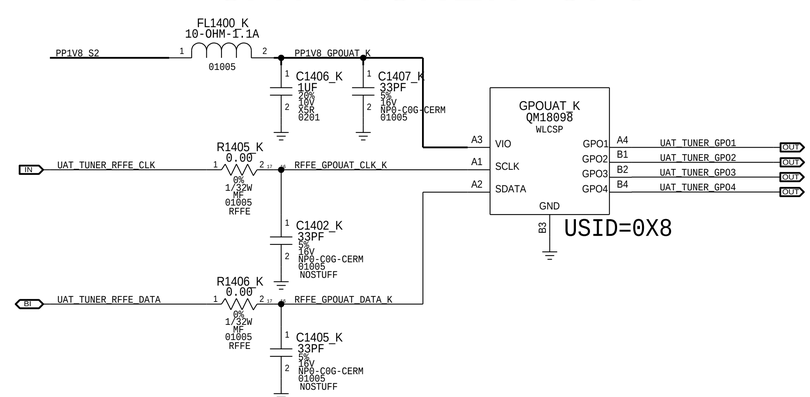

PAGE TITLE	UPPER ANTENNA FEEDS
DRAWING NUMBER	051-02247
SIZE	D
REVISION	7.0.0
BRANCH	evt-1
PAGE	14 OF 17
SHEET	26 OF 34

CONFIDENTIAL AND PROPRIETARY APPLE SYSTEM DESIGN. FOR REFERENCE PURPOSE ONLY - NOT A CHANGE REQUEST

GNSS LNA + RECEIVER

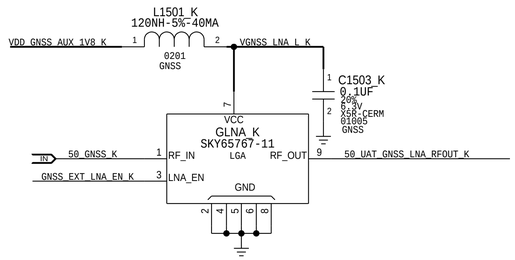

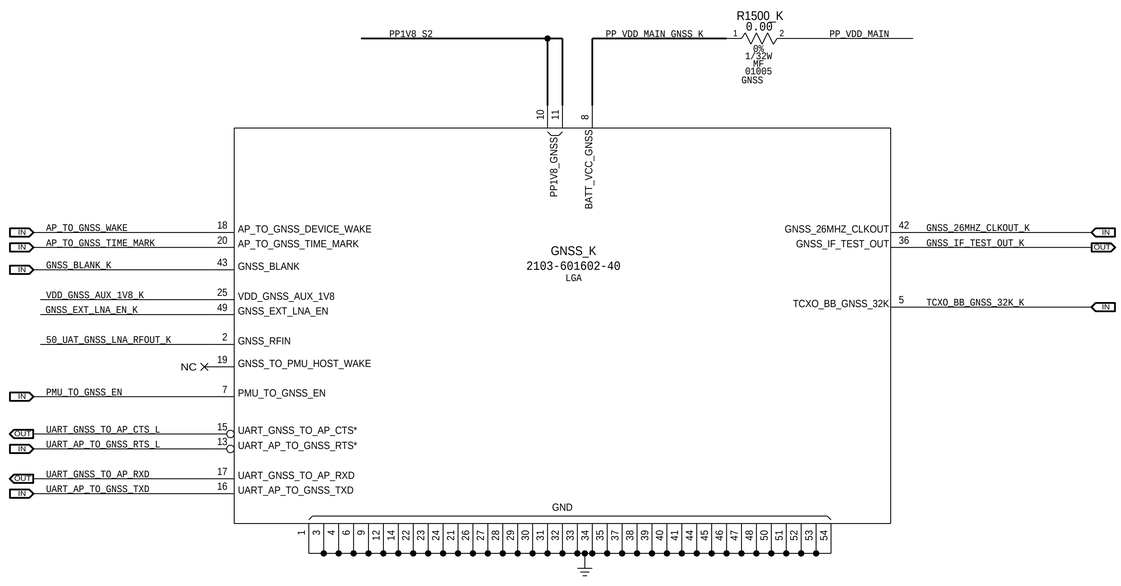

PAGE TITLE	GNSS
DRAWING NUMBER	051-02247
SIZE	D
REVISION	7.0.0
BRANCH	evt-1
PAGE	15 OF 17
SHEET	27 OF 34

CONFIDENTIAL AND PROPRIETARY APPLE SYSTEM DESIGN. FOR REFERENCE PURPOSE ONLY - NOT A CHANGE REQUEST

MLB TEST POINTS

BASEBAND

PP1600_K P2MM-NSM SM 1 AP_TO_BBPMU_RADIO_ON_L 1 2 5 OMIT
PP1601_K P2MM-NSM SM 1 BBPMU_PWRGOOD_K 3 5 6 OMIT
PP1602_K P2MM-NSM SM 1 BBPMU_XG_RESET_L_K 3 5 OMIT
PP1603_K P2MM-NSM SM 1 BBPMU_XG_RESET_SD_L_K 3 5 OMIT
PP1604_K P2MM-NSM SM 1 TCXO_BB_GNSS_32K_K 3 15 OMIT
PP1605_K P2MM-NSM SM 1 BB_DEBUG_ERROR_K 2 OMIT
PP1606_K P2MM-NSM SM 1 AP_TO_BB_MESA_ON_K 1 2 OMIT
PP1607_K P2MM-NSM SM 1 BB_TO_STROBE_DRIVER_GSM_BURST_IND OMIT
PP1640_K P2MM-NSM SM 1 BB_TO_AP_RESET_ACT_L_K 3 OMIT

RFFE

PP1648_K P2MM-NSM SM 1 VDD_RFFE_VIO_1V8_K 6 7 8 9 11 12 13 OMIT
PP1649_K P2MM-NSM SM 1 RFFE1_CLK_K 6 7 8 9 11 12 14 OMIT
PP1650_K P2MM-NSM SM 1 RFFE1_DATA_K 6 7 8 9 11 12 14 OMIT
PLACE NEAR LBPA/MHBPA
PP1653_K P2MM-NSM SM 1 RFFE1_CLK_K 6 7 8 9 11 12 14 OMIT
PP1654_K P2MM-NSM SM 1 RFFE1_DATA_K 6 7 8 9 11 12 14 OMIT
PLACE NEAR XCVR0
PP1651_K P2MM-NSM SM 1 RFFE2_CLK_R_K 6 OMIT
PP1652_K P2MM-NSM SM 1 RFFE2_DATA_R_K 6 OMIT
PLACE NEAR XCVR1
PP1655_K P2MM-NSM SM 1 RFFE_GPOUAT_CLK_K 14 17 OMIT
PP1656_K P2MM-NSM SM 1 RFFE_GPOUAT_DATA_K 14 17 OMIT

XCVR

PP1615_K P2MM-NSM SM 1 SYSCLK_26MHZ_K 2 6 OMIT
PP1657_K P2MM-NSM SM 1 BB_TO_NFC_CLK 1 6 OMIT
PP1658_K P2MM-NSM SM 1 GNSS_26MHZ_CLKOUT_K 6 15 OMIT

ETIC

PP1616_K P2MM-NSM SM 1 50_ET_DAC_P_K 7 8 OMIT
PP1617_K P2MM-NSM SM 1 50_ET_DAC_N_K 7 8 OMIT

BBPMU

PP1627_K P2MM-NSM SM 1 BBPMU_VCLK_K 2 5 OMIT
PP1628_K P2MM-NSM SM 1 BBPMU_VDIO_K 2 5 OMIT
PP1608_K P2MM-NSM SM 1 AP_TO_MANY_BSYNC 1 5 OMIT

PCIE

PP1641_K P2MM-NSM SM 1 90_PCIE_AP_TO_BB_REFCLK_P 1 2 OMIT
PP1642_K P2MM-NSM SM 1 90_PCIE_AP_TO_BB_REFCLK_N 1 2 OMIT
PP1609_K P2MM-NSM SM 1 90_PCIE_AP_TO_BB_TXD_P 1 2 OMIT
PP1610_K P2MM-NSM SM 1 90_PCIE_AP_TO_BB_TXD_N 1 2 OMIT
PP1635_K P2MM-NSM SM 1 90_PCIE_BB_TO_AP_RXD_P 1 2 OMIT
PP1611_K P2MM-NSM SM 1 90_PCIE_BB_TO_AP_RXD_N 1 2 OMIT
PP1612_K P2MM-NSM SM 1 PCIE_AP_TO_BB_RESET_L 1 2 16 OMIT
PP1613_K P2MM-NSM SM 1 PCIE_BB_BI_AP_CLKREQ_L 1 2 OMIT
PP1614_K P2MM-NSM SM 1 BB_TO_PMU_PCIE_HOST_WAKE_L 1 2 OMIT

GNSS

PP1618_K P2MM-NSM SM 1 GNSS_EXT_LNA_EN_K 15 OMIT
PP1619_K P2MM-NSM SM 1 PMU_TO_GNSS_EN 1 15 OMIT
PP1620_K P2MM-NSM SM 1 UART_GNSS_TO_AP_RXD 1 15 OMIT
PP1621_K P2MM-NSM SM 1 UART_AP_TO_GNSS_TXD 1 15 OMIT
PP1622_K P2MM-NSM SM 1 UART_GNSS_TO_AP_CTS_L 1 15 OMIT
PP1623_K P2MM-NSM SM 1 UART_AP_TO_GNSS_RTS_L 1 15 OMIT
PP1624_K P2MM-NSM SM 1 AP_TO_BB_TIME_MARK 1 15 OMIT
PP1625_K P2MM-NSM SM 1 GNSS_IF_TEST_OUT_K 15 OMIT

DIGRF

PP1629_K P2MM-NSM SM 1 90_DIGRF_M1_TX_P_K 2 6 OMIT
PP1630_K P2MM-NSM SM 1 90_DIGRF_M1_TX_N_K 2 6 OMIT
PP1631_K P2MM-NSM SM 1 90_DIGRF_A1_RX1_P_K 2 6 OMIT
PP1632_K P2MM-NSM SM 1 90_DIGRF_A1_RX1_N_K 2 6 OMIT
PP1646_K P2MM-NSM SM 1 90_DIGRF_M0_TX_P_K 2 6 OMIT
PP1647_K P2MM-NSM SM 1 90_DIGRF_M0_TX_N_K 2 6 OMIT

BB UART

PP1643_K P2MM-NSM SM 1 UART_BB_TO_AP_RXD_K 1 2 16 OMIT

PP1660_K P2MM-NSM SM 1 SWD_AOP_TO_MANY_SWCLK 1 3 OMIT
PP1661_K P2MM-NSM SM 1 SWD_AOP_BI_BB_SWDIO 1 3 OMIT

PCIE GND

PP1633_K P2MM-NSM SM 1 OMIT
PP1634_K P2MM-NSM SM 1 OMIT

SIM CARD CONNECTOR

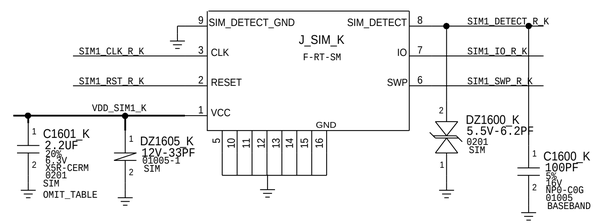

DZSIM_K
ESDZV5-4BF4
SM

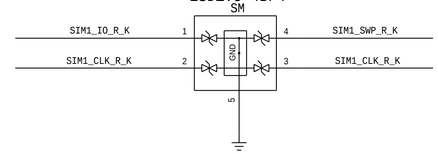

R1613_K 10 5% 1/32W MF 01005 — BI SIM1_IO_K — SIM1_IO_R_K
R1614_K 10 5% 1/32W MF 01005 — IN SIM1_CLK_K — SIM1_CLK_R_K
R1615_K 10 5% 1/32W MF 01005 — IN SIM1_RST_K — SIM1_RST_R_K
R1616_K 10 5% 1/32W MF 01005 — BI NFC_SWP — SIM1_SWP_R_K
R1617_K 10 5% 1/32W MF 01005 — OUT SIM1_DETECT_K — SIM1_DETECT_R_K

HARDWARE ID

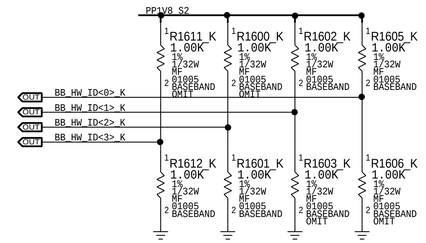

HARDWARE	HW_ID<3:0>
ICE17.2 RF DEV1	0 0 0 Z
ICE17.2 RF DEV2	0 0 Z 0
RESERVED	0 0 Z Z
RESERVED	0 Z 0 0
RESERVED	0 Z 0 Z

HARDWARE	HW_ID<3:0>
ICE17.2 PROTO1	0 0 0 0
ICE17.2 PROTO2	0 0 0 1
ICE17.2 PROTO3	0 0 1 0
ICE17.2 EVT	0 0 1 1
RESERVED	0 1 0 0

DEV CONFIG

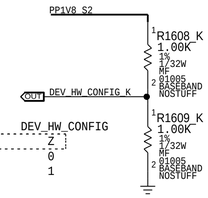

HW_CONFIG	DEV_HW_CONFIG
RESERVED	Z
RESERVED	0
RESERVED	1

BOOTCFG

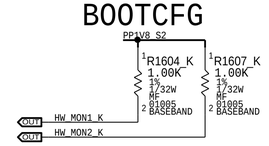

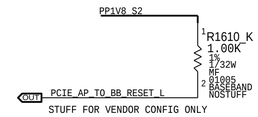

	HW_MON1	HW_MON2	TRIG_IN
NAND	0	0	1
FLASHLESS	1	0	1
FLASHLESS_WDOG_DIS	1	1	0
NAND	1	1	1

BOOTSTRAPS ARE INTERNALLY PULLED DOWN

DEBUG CONNECTOR

MLB 516S1185
FLEX 51S1184

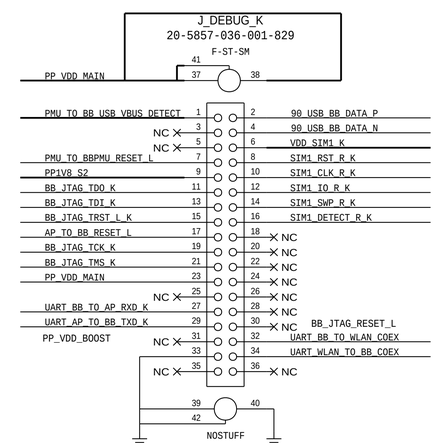

PAGE TITLE	
DRAWING NUMBER	SIZE D
REVISION	
BRANCH	
PAGE	
SHEET	

METROCIRC

D211 NORTH-SOUTH METROCIRC
339S00297

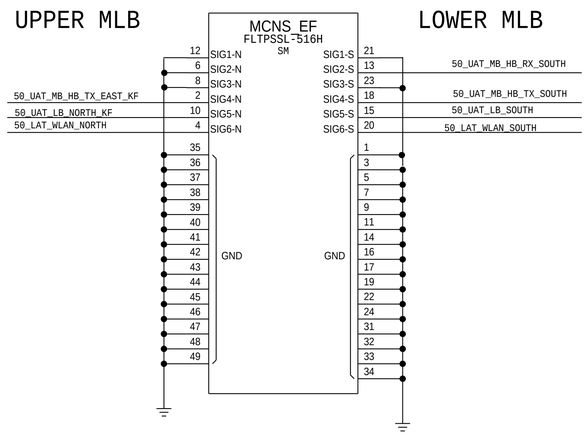

339S00296

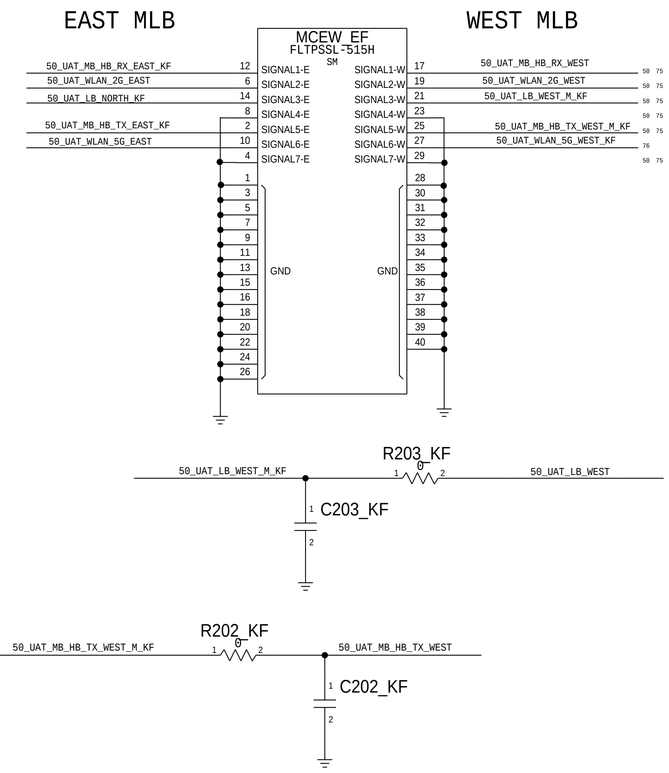

LAT METROCIRC FEED

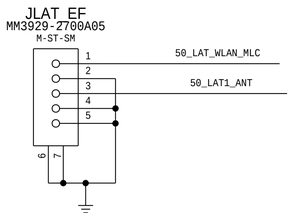

UAT1 TEST

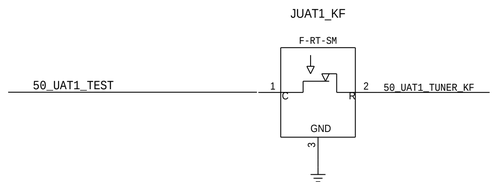

WIFI 5GHZ TEST

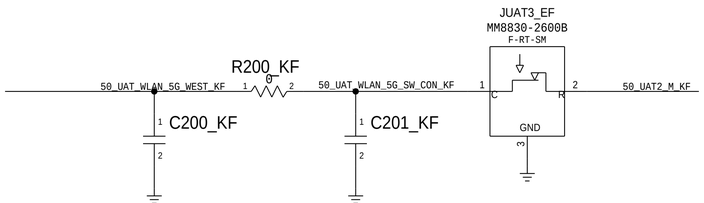

PAGE TITLE	
DRAWING NUMBER	SIZE D
REVISION	
BRANCH	
PAGE	
SHEET	

UAT TUNER FLEX

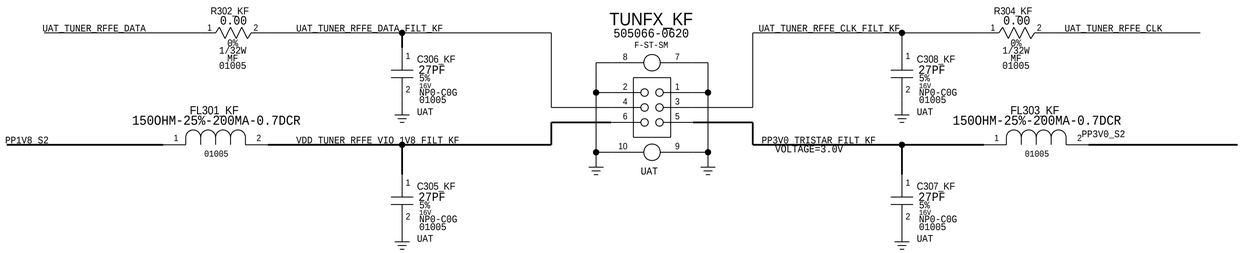

PINOUT IS ROTATED 180
COMPARED TO D20 & D201

UAT TUNER

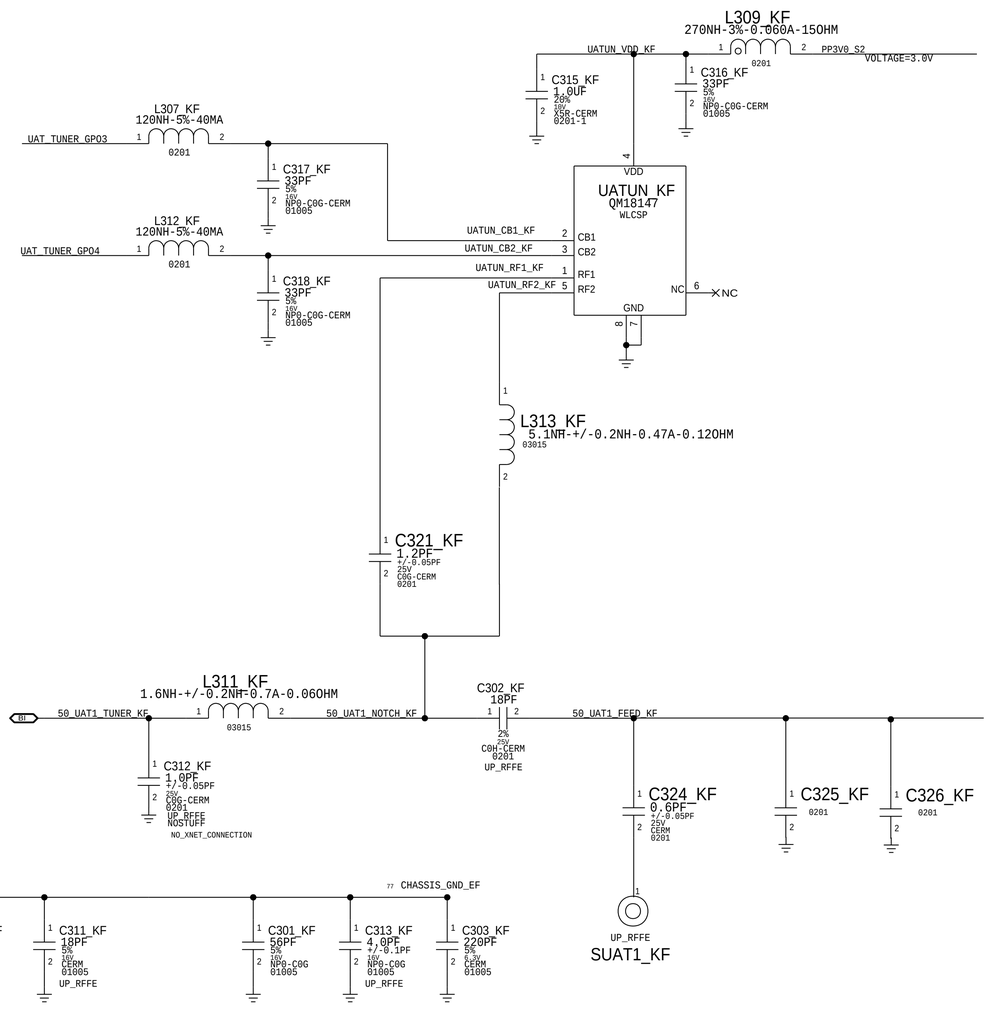

ALT UAT1 GND

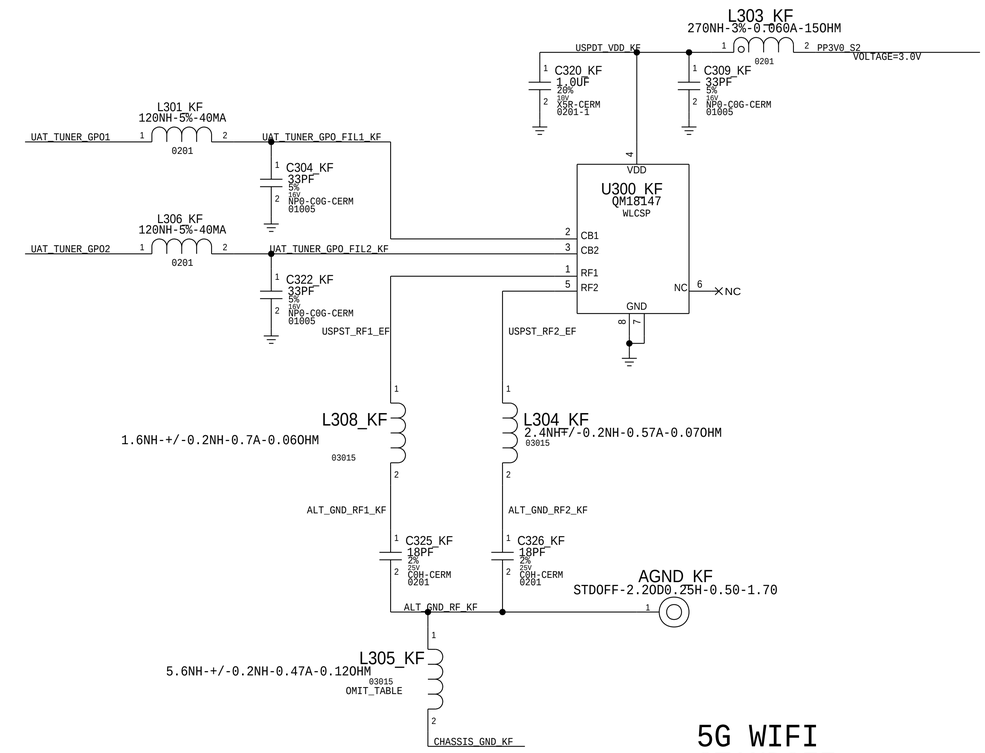

5G WIFI STANDOFF

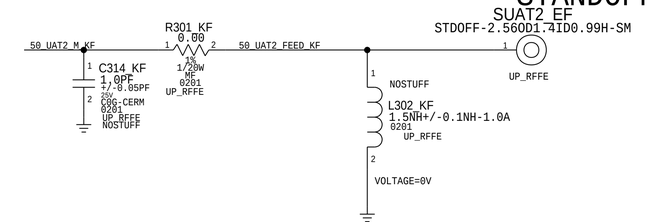

PAGE TITLE	UAT MATCH AND TUNER
DRAWING NUMBER	051-02159
SIZE	D
REVISION	10.0.0
BRANCH	
PAGE	3 OF 4
SHEET	77 OF 81